250 kN

S

ZE-250-S | translating screw

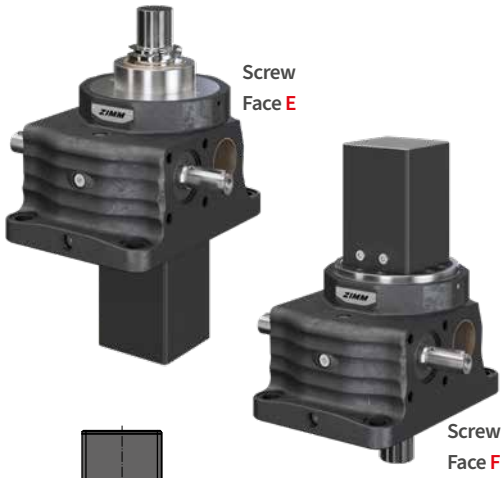

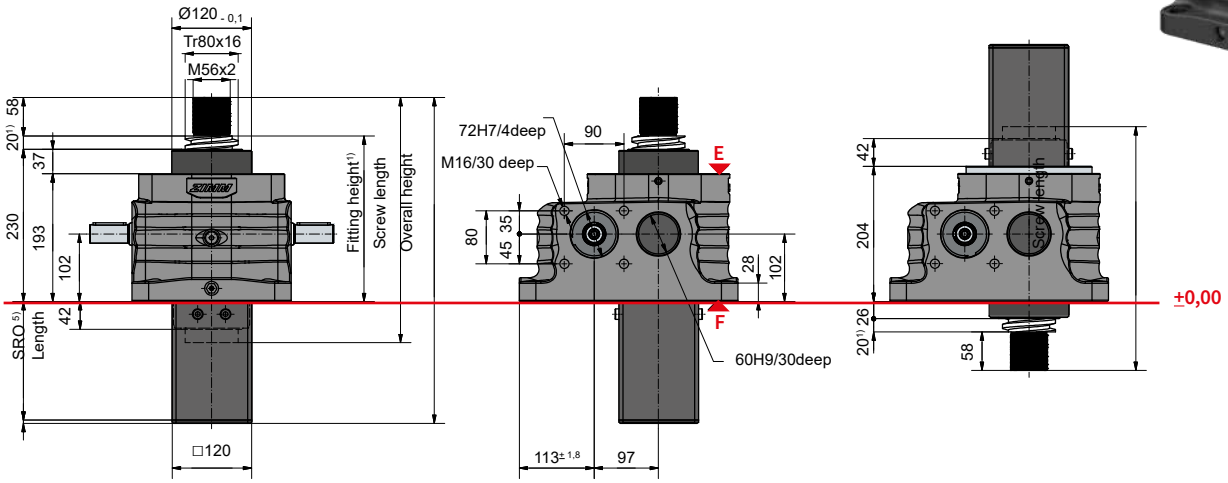

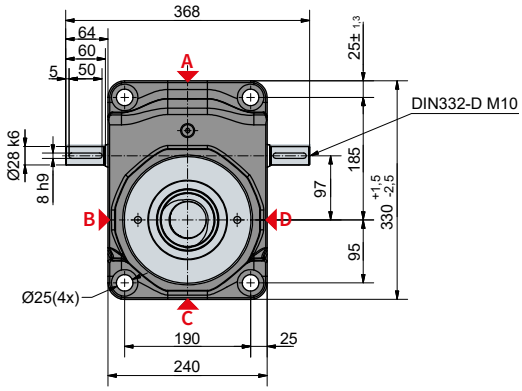

Opening for protective tube SRO

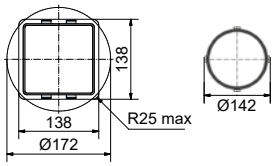

Protective tube length with Tr 80x16-Screw

Without escape/ rotation protection	92 + stroke	Ø 125
with escape protection AS	122 + stroke	Ø 125
with rotation protection VS	122 + stroke	□ 120 x 120
with VS and limit switch set ESSET	150 + stroke	□ 120 x 120

Standard configuration

Code	Gearbox (series)	Size	Version (variant)	Ratio	Screw	Stroke per drive shaft rotation
ZE-250-SN	ZE	250	S (translating screw)	N (normal) 10,66:1	Tr 80x16	1,50 mm
ZE-250-SL				L (low) 32:1		0,50 mm

250 kN

Duty cycle thermal limit

Ratio „N“ (10,66:1)

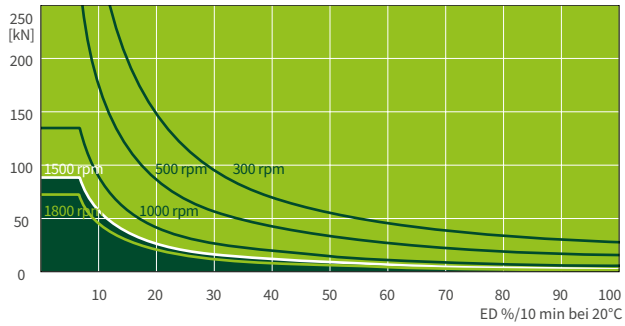

Ratio „L“ (32:1)

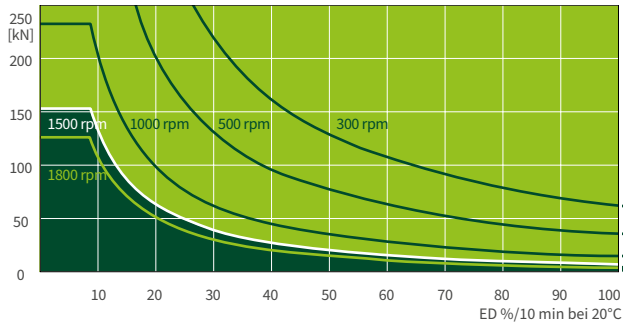

These curves are for guidance under standard industrial conditions (ambient temperature 20°C etc.) and correct maintenance (lubrication etc.).
They are based on the ZIMM standard trapezoidal thread Tr 80x1. The operation cycles can be many times longer, when using ball screws.