150 kN
ZE-150-S | translating screw

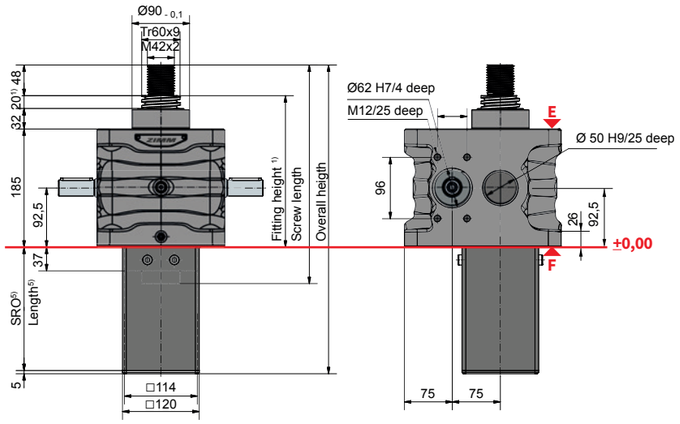

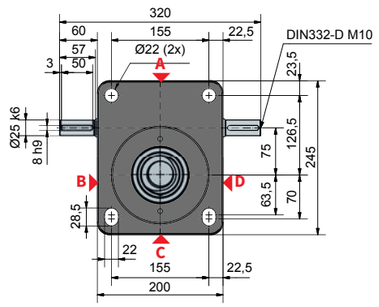

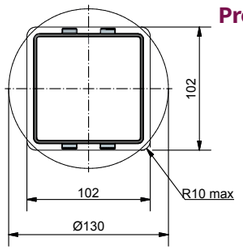

Protective tube length SRO with Tr 60x9-screw

Protective tube diameter SRO: Square or round.

w/o escape protection/ anti-rotation device	87 + Stroke
Incl. escape protection/ anti-rotation device	117 + Stroke
Incl. anti-rotation device and limit switch ES	149 + Stroke

Standard configuration

Code	Gearbox series	Size	Version (variant)	Speed & ratio	Screw size	Stroke per drive shaft rotation
ZE-150-SN	ZE	150	S (translating screw)	N (normal) 9:1	Tr 60x9	1,00 mm
ZE-150-SL				L (low-speed) 36:1		0,25 mm

150 kN
ZE-150-R | rotating screw

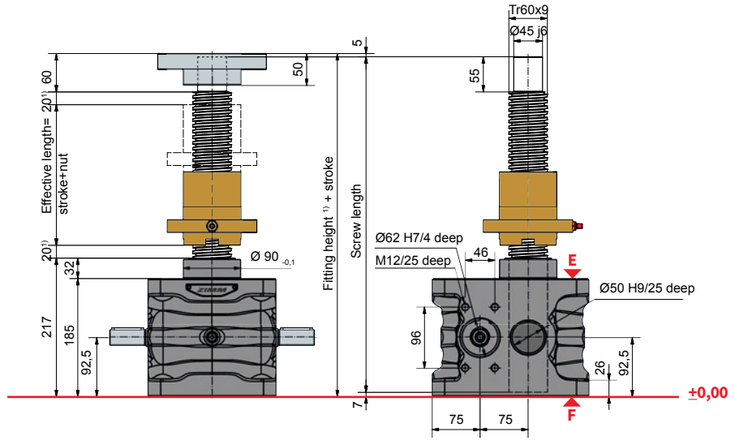

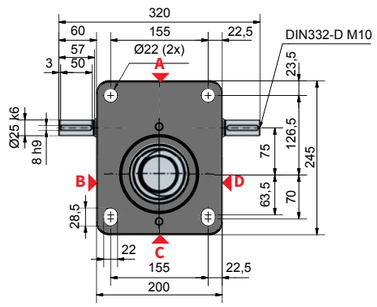

Standard configuration

Code	Gearbox series	Size	Version (variant)	Speed & ratio	Screw size	Stroke per drive shaft rotation
ZE-150-RN	ZE	150	R (rotating screw)	N (normal) 9:1	Tr 60x9	1,00 mm
ZE-150-RL				L (low-speed) 36:1		0,25 mm

150 kN

Duty cycle thermal limit (S + R) for standard gearbox (grease lubrication)

Ratio „N“ (9:1)

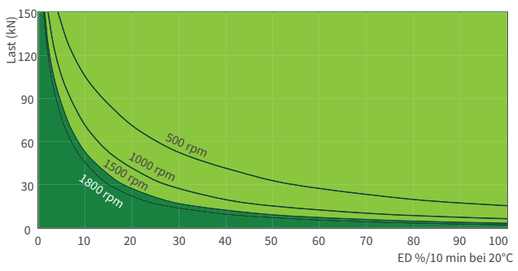

Ratio „L“ (36:1)

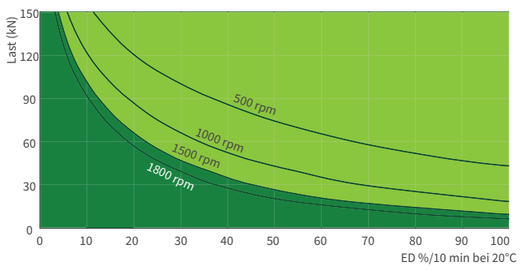

These maps are for orientation under standard industrial terms (ambient temperature 20% etc.) and proper maintenance (lubrication, etc.).
They are based on the ZIMM standard trapezoidal thread Tr 60x9. With the use of a ball screw, the operation cycles can be many times longer. In case you need an even longer duration or performance, you will find information about our ZE-H high performance gearboxes on chapter 2.3.

Technical data series ZE-150-S / ZE-150-R

max. compressive / tensile force, static:	150 kN (15 t)
max. compressive / tensile force, dyn.:	see duty cycle curves
Input speed:	1500 rpm / max. 1800 rpm (depending on the load and duty cycle)
Screw size standard:	Tr 60x9[2])
Gear ratio:	9:1 (N) / 36:1 (L)
Housing material:	GGG, corrosion-resistant
Worm shaft:	steel, case-hardened, ground
Weight of screw jack body:	42 kg
Weight of screw/m:	19 kg
Gearbox lubrication:	synthetic fluid grease
Screw lubricaion:	grease lubrication
Gearbox operating temperature:	max. 60°C, higher on request
Moment of inertia:	N: 7,92 kg cm² / L: 5,17 kg cm²
Input torque (at 1500 rpm):	max. 75,1 Nm (N) / max. 20,7 Nm (L)
Drive-thorugh torque:	max. 540 Nm
Drive torque M_G (Nm):	F (kN) x 0,75[3,4]) (N-normal) F (kN) x 0,25[3,4]) (L-Llow-speed)
Breakaway torque:	Drive torque M_G x 1,5

Make a plan to keep a safe distance of at least 20 mm between gearbox and nut or between nut and threaded end!
Detailed length calculations of protection tubes and bellows are easy and convenient with our online configurator:
www.zimm.com

Important information:
1) If a bellow, spiral spring or double pitch is used; more fitting space is required
2) Tr 60x9 is standard, also available: double-pitch, INOX, left-handed, increased screw Tr 80x16 (only for the R version)
3) factor includes efficiency, ratio and 30% safety
4) for a 9 mm screw pitch
5) to calculate the length of our protective tube length SRO simply use our online configurator: www.zimm.com