mayr®

your reliable partner

ROBA-stop M® 2000

The robust motor brake for big applications

www.mayr.com

New ROBA-stop M® construction size 2000:

The robust ROBA-stop M® motor brake is now available in the new construction size 2000. It offers much higher braking torque than the existing standard construction sizes and is thus ideally suited to big applications with extreme loads.

Everything stays the same otherwise:
The tried-and-tested ROBA-stop M® series is as reliable as ever and extremely flexible thanks to numerous options, including hand release and encoder adaptation.

In this way, the ROBA-stop M® safety brake with the construction size 2000 remains an all-round talent for industrial applications.

Features:

- **Available with IP54 or IP66 protection**
- **As a holding brake with up to 3,500 Nm braking torque**
- **As a dynamic brake with up to 2,500 Nm braking torque**
- **With an emergency hand release**
- **Easy installation**
- **Cost efficient**

ROBA-stop M® designs:

Illustrated with an eyebolt for installation using hoisting devices

IP54 design

- Emergency hand release
- Ready for encoder installation
- Tacho flange plate (optional)

IP66 design

- Emergency hand release
- Closed design (cover)
- IP66 flange plate (optional)

Technical data:

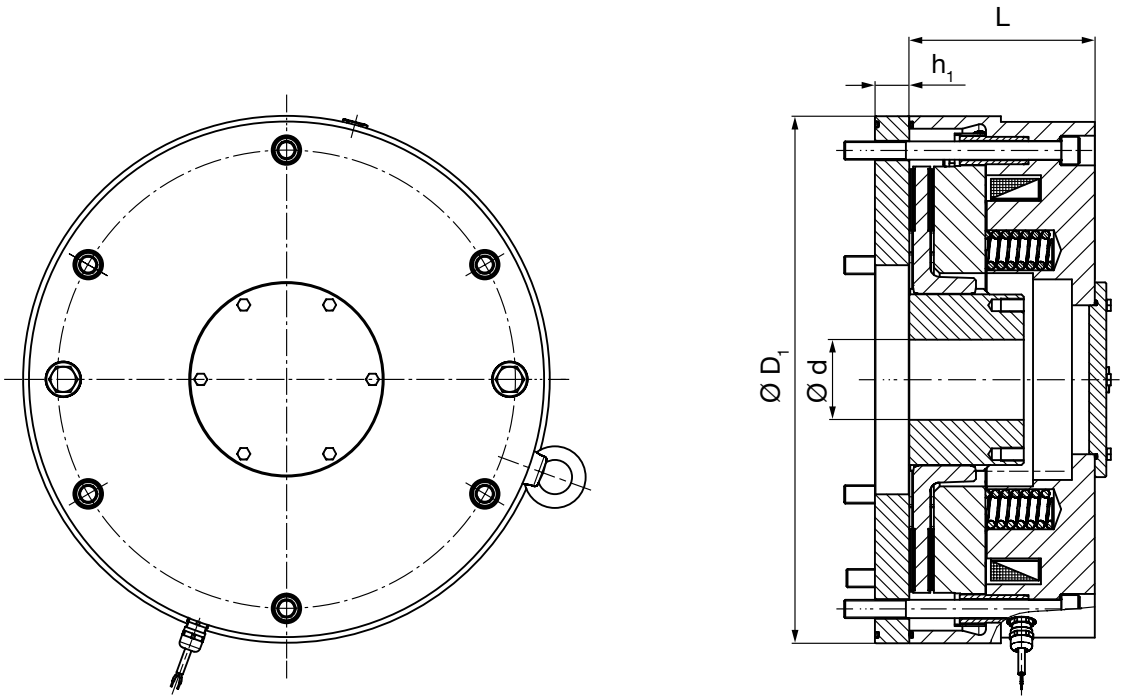

Dynamic brake			Holding brake		
Nominal braking torque [Nm]	Mn	2000	Nominal braking torque [Nm]	Mn	3500
Max. nominal braking torque [Nm]	Mn_{max}	2500			
Max. speed [rpm]	n_{max}	2500	Max. speed [rpm]	n_{max}	1000
Max. idle speed [rpm]	n_{max}	2600	Max. idle speed [rpm]	n_{max}	2600
Min. bore diameter [mm]	d_{min}	80	Min. bore diameter [mm]	d_{min}	80
Max. bore diameter [mm]	d_{max}	110	Max. bore diameter [mm]	d_{max}	110
Outer diameter [mm]	D	460	Outer diameter [mm]	D	460
Length [mm]	L	162	Length [mm]	L	162
IP66 flange plate thickness [mm]	h_1	30	IP66 flange plate thickness [mm]	h_1	30

Mounting pitch circle: 6 or 8 × M16 on PCD 400mm

MANY LOCATIONS ONE QUALITY

mayr®
your reliable partner

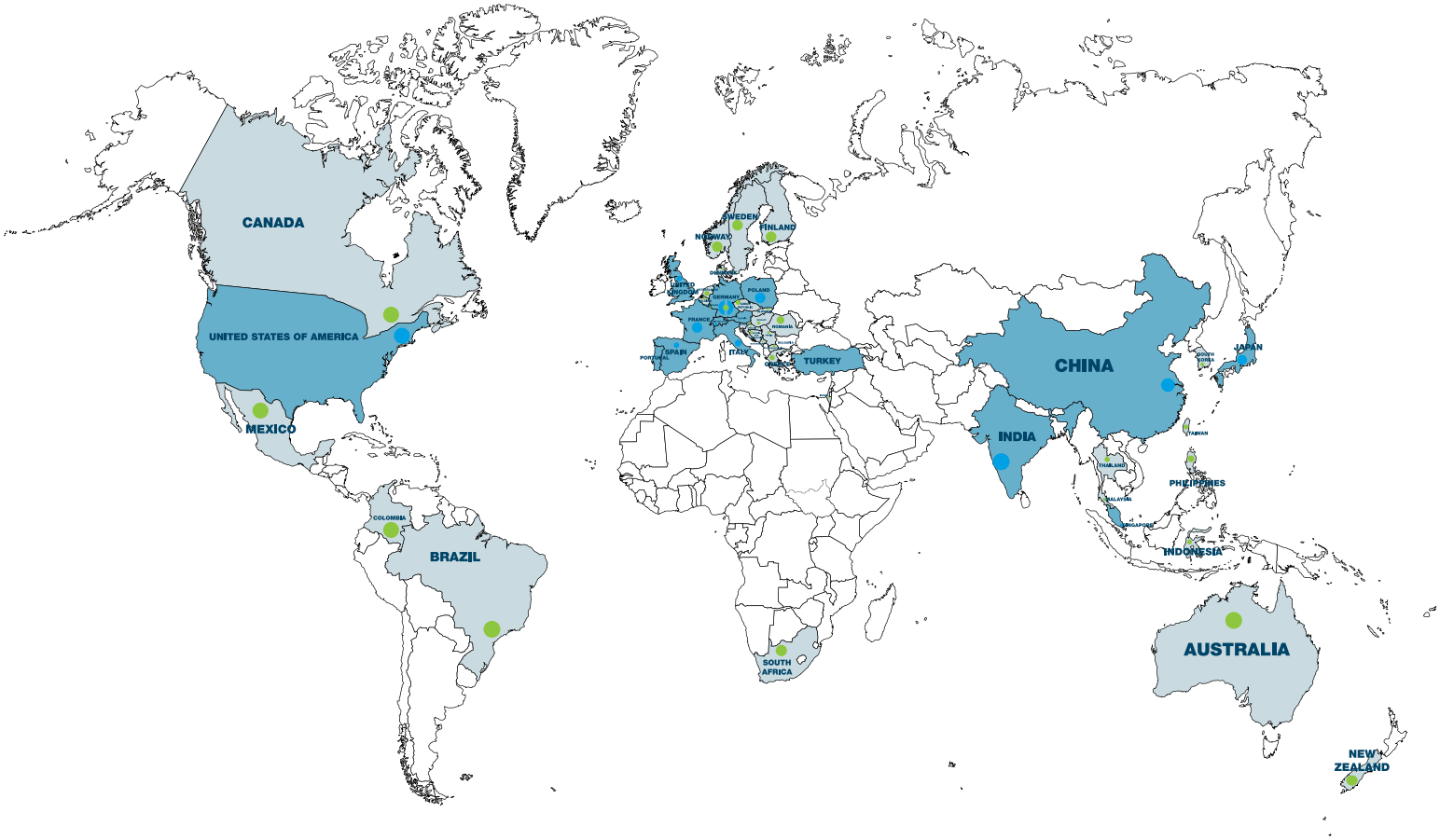

Headquarters · Subsidiaries · Representatives

mayr ® power transmission
Eichenstraße 1
87665 Mauerstetten

Tel.: +49 (0)8341 804-0

public.mayr@mayr.de

www.mayr.com

ADDITIONAL INFORMATION

For everything you need to know about the ROBA-stop M® 2000, including downloads and configuration – simply scan the QR code!

891.01.V01_EN 08/26 AM/GF/HAU