S R Pivot mounts LB

5 to 350 kN

*Axis of pivoting **R***
*(**at right angles** to the drive)*

Pivot mounts LB (5 - 25)

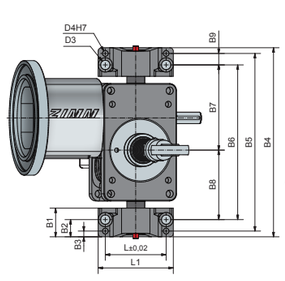

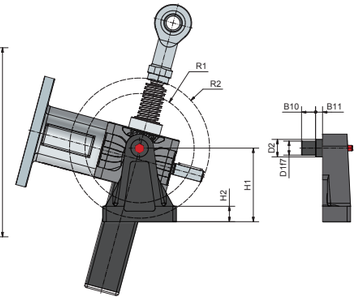

Ordering example

ZE-5/10-LB Set (2 items) or ZE-25-LB Set (2 items)

Lubrication
The bronze bushes are PTFE-coated and therefore require no lubrication in normal service. We recommend regular lubrication for high loadings.

Code	B1	B2	B3	B4	B5	B6	B7	B8	B9	B10	B11	D1	D2	D3	D4	H1	H2	L1	L2	R1	R2	kg/Set
ZE-5 (5/10-LB)	40	25	10	200	180	150	84	66	15	15	6	16	22	11	8	80	18	90	70	57	63	0,7
ZE-10 (5/10-LB)	40	25	10	220	200	170	95	75	15	15	6	16	22	11	8	80	18	90	70	68	74	0,7
ZE-25 (25-LB)	40	24	8	264	248	216	119	97	16	20	10	20	25	13	8	105	21	105	85	78	100	1,3

Material: aluminium, corrosion-resistant, bolt: stainless steel

*Axis of pivoting **P***
*(**parallel** to the drive)*

Bearing mount LB (35 - 350)

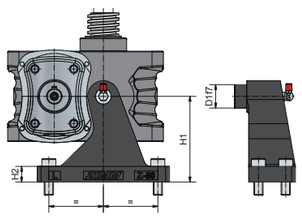

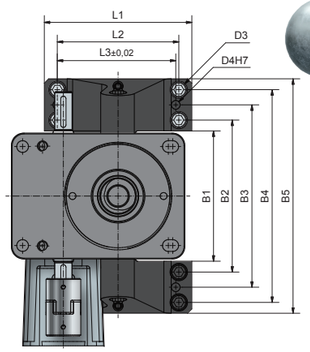

Lubrication
The bronze bushings in the gearbox are PTFE-coated and therefore do not need to be lubricated during normal operation. For heavy loads we recommend regular lubrication.

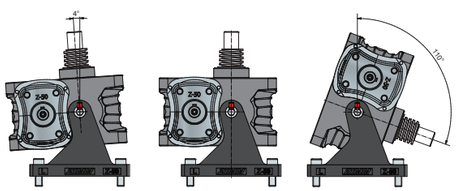

Ordering example

ZE-50-LB Set (2 items)

Code	D1	D3	D4	H1	H2	L1	L2	L3	B1	B2	B3	B4	B5	kg/Set
ZE-35-LB	28	11	8	85	18	130	106	106	124	146	174	202	224	3,2
ZE-50-LB	30	13	10	110	18	170	140	140	150	175	210	245	270	5
ZE-100-LB	40	22	20	120	22	260	180	225	210	250	290	330	370	11,8
ZE-150-LB	50	22	20	135	24	280	200	235	222	262	312	362	402	18
ZE-200-LB*	50	22	20	135	24	280	200	235	237	277	327	377	417	18
ZE-250-LB	60	26	20	170	32	285	230	220	265	325	400	475	535	31
ZE-350-LB	80	33	25	210	36	380	310	300	302	372	462	552	622	66

Material: cast steel, tempered, corrosion-resistant
**ZE-150-LB is used for the ZE-200-LB. Max. load capacity: 150 kN*

S R Pivot bearing plate KAR

*Axis of pivoting **P***
*(**parallel** to the drive)*

Pivot bearing plate KAR

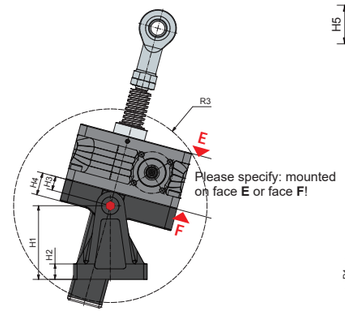

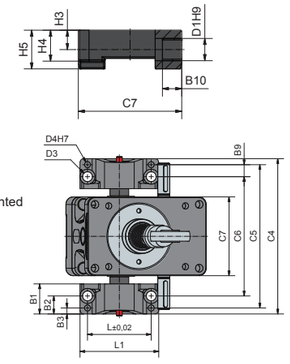

Lubrication
The bronze bushings in the gearbox are PTFE-coated and therefore do not need to be lubricated during normal operation. For heavy loads we recommend regular lubrication.

For large motors, long strokes and a high operating cycle, the variant with the slide bearing plate KAR is to be preferred because then the motor weight is absorbed by the pivot bearing plate and does not affect the spindle.

Code	B1	B2	B3	B9	B10	C4	C5	C6	C7	D1	D3	D4	H1	H2	H3	H4	H5	L1	L2	R3	kg
ZE-5-KAR	40	25	10	15	15	166	146	116	74	16	11	8	80	18	15	21	30	90	70	100	0,2
ZE-10-KAR	40	25	10	15	15	179	159	129	87	16	11	8	80	18	15	24	30	90	70	116	0,3
ZE-25-KAR	40	24	8	16	20	207	191	159	107	20	13	8	105	21	20	32	40	105	85	138	0,8

Material: aluminium, corrosion-resistant, *Other sizes of pivot arrangements R and P are available on request.*

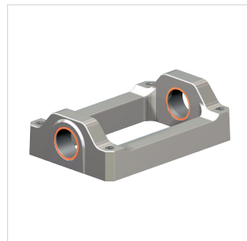

*Axis of pivoting **R***
*(**at right angles** to the drive)*

Pivot bearing plate ZE-35-KAR

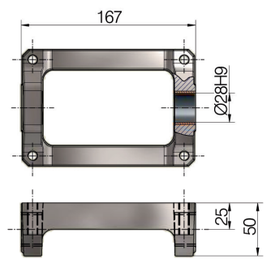

Multiple system control

With the pivot bearing plate KAR you can control and connect a setup of multiple gearboxes lined up in a row. **Other sizes of pivot** arrangements R and P are available on request.

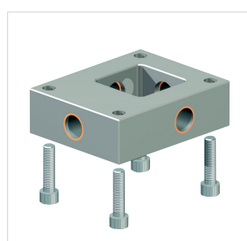

Pivot bearing plate GSZ-KAR (2 to 150)

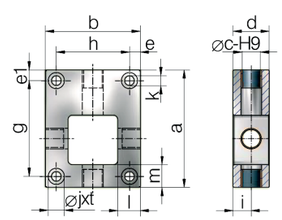

Code	a	b	c	d	e	e1	g	h	i	j	k	l	m	t	kg
GSZ-2-KAR[1)]	70	50	16	30	6	6	48	38	13	13	6,6	11	13	8	0,16
GSZ-5-KAR	80	72[2)]	16	30	10	10	60	52	15	15	9	18	10	9	0,8
GSZ-10-KAR	100	85[2)]	16	30	11	11	78	63	15	15	9	16	11	9	1,15
GSZ-25-KAR	130	105[2)]	20	40	12	12	106	81	20	18	11	25	25	11	2,8
GSZ-50-KAR	180	145	30	50	15	15	150	115	25	20	13	24	30	13	5,3
GSZ-100-KAR	200	175	40	70	22	17	166	131	35	26	17	40	30	18	11,1
GSZ-150-KAR	220	205	50	80	25	25	170	155	40	33	22	40	28	22	13,47

Material: steel, corrosion-resistant. 1) GSZ-2-KAR: aluminium, corrosion-resistant. Delivery incl. screws.