mayr®

your reliable partner

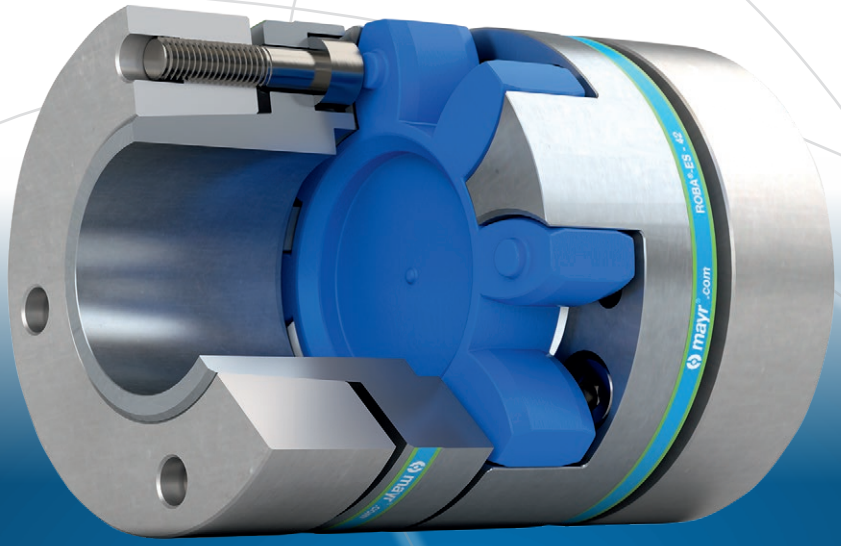

ROBA®-ES

K.940.V19.EN

www.mayr®.com

We safeguard the movements of this world

The Christian Mayr mill-construction business – founded in 1897.

Communications Centre mayr.com – opened in 2018.

Specialists in power transmission for more than a century

mayr® power transmission is one of the most traditional and yet most innovative German companies in the field of power transmission. From modest beginnings in the year 1897, the family enterprise from the Allgäu region has developed into the world market leader. Today, 700 employees work at the headquarters in Mauerstetten; more than 1200 employees work for the company worldwide.

An unsurpassed standard product range

mayr® power transmission offers a wide variety of torque limiters, safety brakes, backlash-free shaft misalignment compensation couplings and high-quality DC drives. Regarding customer-specific requirements, too, the company possesses the expertise to develop customized and economical solutions. This is why numerous renowned machine manufacturers trust in holistic solutions by *mayr*® power transmission.

Represented worldwide

With eight subsidiaries in Germany, sales offices in the USA, France, Great Britain, Italy, Singapore and Switzerland as well as 36 additional country representatives, *mayr*® is available in all important industrial areas, guaranteeing optimum customer service around the globe.

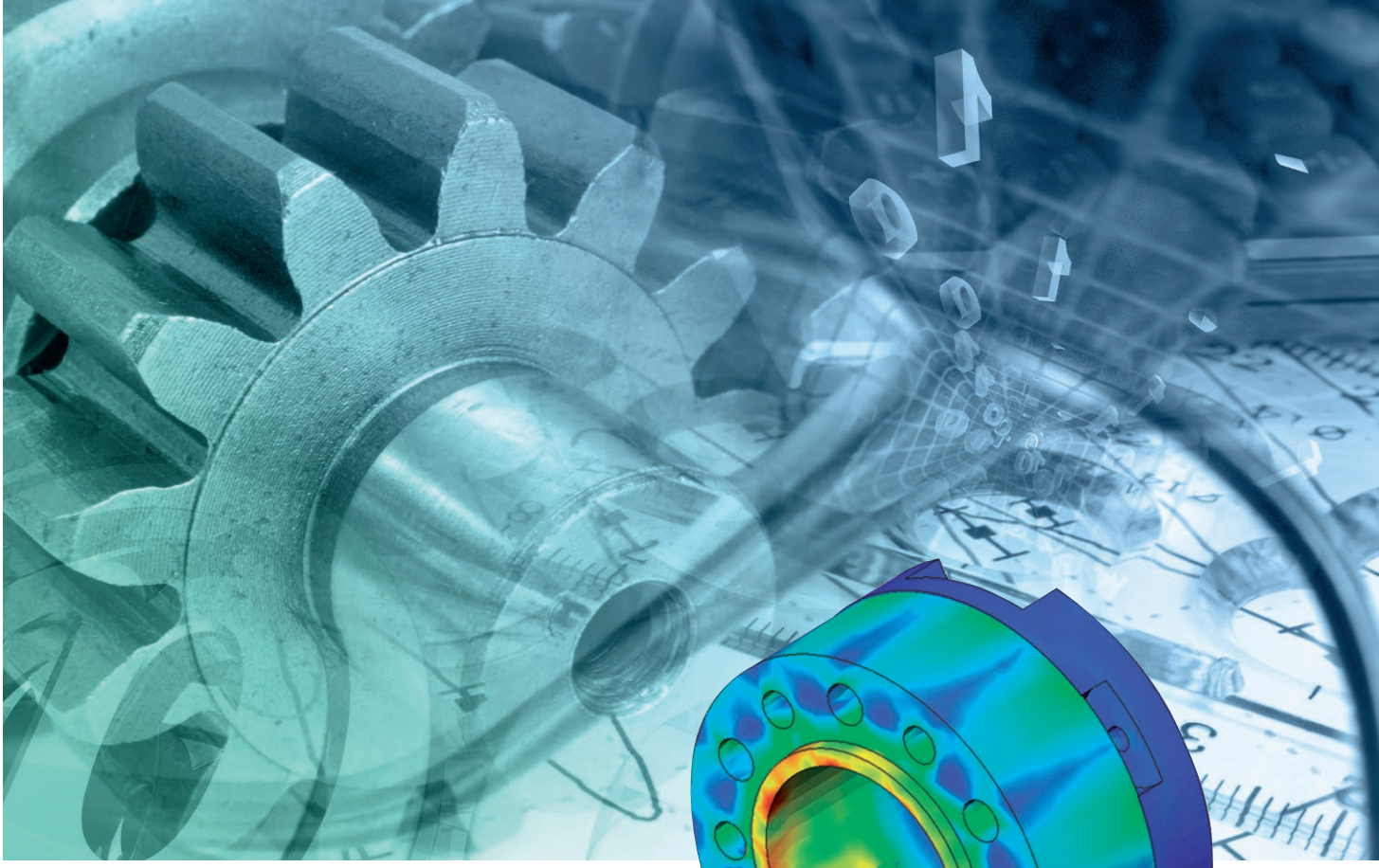

Tradition and innovation – the best of both worlds

Tradition and innovation do not contradict each other - on the contrary. They are the two supporting pillars which have guaranteed stability and reliability for generations. Long-term stability, independence as well as a good reputation and satisfied customers are important values for a family enterprise rich in tradition.

Therefore, we place emphasis on:

- Tested product quality,
- Optimum customer service,
- Comprehensive know-how,
- Global presence,
- Successful innovations and
- Effective cost management.

By pursuing our own objective of always offering our customers the technologically most advanced and most economical solution, we have been able to gain the trust of many leading industrial companies from all branches and from all over the world as a reliable partner.

Place your trust in our know-how and our more than 50 years of experience in the areas of torque limiters, safety brakes and shaft couplings.

ROBA®-ES

Backlash-free elastomer coupling

- **Vibration damping**
- **Damping behaviour can be selected through elastomeric elements in different Shore hardnesses**
- **Backlash-free torque transmission through pre-tensioned elastomeric element**
- **Compensation of shaft misalignments**
- **Plug-in connection, therefore suitable for blind assembly**
- **Maintenance-free, media-resistant, temperature-stable**
- **Torsionally flexible on a small scale, but two to four times more rigid than toothed belt drives.**

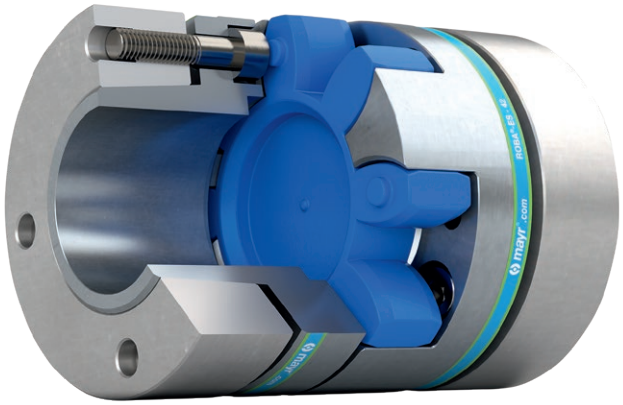

ROBA®-ES Elastomeric Elements

The elastomeric elements are the central element of the ROBA®-ES-coupling. They define the application field as well as the shaft connection behavior via the permitted torque, the rigidity, the damping and the misalignment values.

By using a unique polyurethane material and a special injection procedure, it is possible to achieve a high dimensional accuracy and evenness in the teeth of the elastomeric element.

The elastomeric elements are available in different shore hardnesses. The teeth of the elastomeric element are chamfered at the sides. This makes blind assembly easier.
The ambient temperatures present during operation have a considerable effect on the dimensioning of a ROBA®-ES-coupling (see Dimensioning page 22).

Dimensioning

The characteristics of ROBA®-ES couplings can be greatly varied by using different elastomeric elements. Due to different damping characteristics and the non-linear rigidity of the elastomer, this element also offers more parameters than the steel shaft connection, which should be taken into account on selection.

We therefore recommend careful, thorough coupling dimensioning (see Dimensioning page 22).

Agent Resistance

The elastomeric elements are very resistant against
- pure mineral oils (lubricating oils)
- and anhydrous greases.

They have a similar resistance against fuels such as
- regular-grade petroleum
- diesel oil
- kerosene.

Damage may occur after longer exposure to
- alcohols or
- aromatic fuels (super/four star petrol).

The elastomeric element material used is resistant to hydrolysis. In contrast to other polyurethane materials, water (including sea water) causes, even after years of exposure, no particular changes to the mechanical characteristics. Hot water, however, reduces the mechanical strength.

ROBA®-ES couplings are also available in ATEX design according to the directive 2014/34/EU.

ROBA®-ES Contents

Designs

ROBA®-ES with key hubs

- Single-jointed coupling
- Double-jointed coupling short
- Double-jointed coupling with sleeve

ROBA®-ES couplings are delivered as un-bored hub design (further processing to be carried out customer-side) or with a finish bore and keyway JS9 (DIN 6885/1). An adjusting screw is located in the hub for axial securement.

Up to Size 38, the hubs are made of aluminium. From Size 42, they are made of steel.

Conventional bores can be delivered from stock.

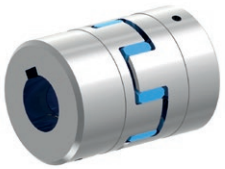

Page 8

ROBA®-ES with clamping hubs

- Single-jointed coupling
- Double-jointed coupling short
- Double-jointed coupling with sleeve

ROBA®-ES couplings with clamping hubs are conceived for fast and safe installation or de-installation. They have no keyway. The tightening torque (T_A) on the clamping screws must be maintained in order to ensure reliable, frictionally-locking torque transmission.

Please observe the maximum permitted torques (Page 28).

Up to Size 38, the hubs are made of aluminium. From Size 42, they are made of steel.

The clamping hub can be designed with an additional keyway on request.

Page 10

ROBA®-ES with clamping hubs Compact

- Single-jointed coupling
- Double-jointed coupling short
- Double-jointed coupling with sleeve

ROBA®-ES couplings with clamping hubs are conceived for fast and safe installation or de-installation. They have no keyway. The tightening torque (T_A) on the clamping screws must be maintained in order to ensure reliable, frictionally-locking torque transmission.

Please observe the maximum permitted torques (Page 28).

The hubs are made of aluminium. The clamping hub can be designed with an additional keyway on request.

Due to the compact construction of the short clamping hubs, the couplings can be used in constricted installation conditions

Page 12

ROBA®-ES with split clamping hubs

- Single-jointed coupling
- Double-jointed coupling short
- Double-jointed coupling with sleeve

ROBA®-ES couplings with split clamping hubs are conceived for fast and safe installation or de-installation. Due to the orientation of the half-shells in the same direction, radial assembly/disassembly of the coupling is possible at stationary shaft ends. The tightening torque (T_A) on the clamping screws must be maintained in order to ensure reliable, frictionally-locking torque transmission.

Please observe the maximum permitted torques (page 29).

Up to Size 38, the hubs are made of aluminium. From Size 42, they are made of steel. The split clamping hub can be designed with an additional keyway on request.

Page 14

ROBA®-ES with aluminium shrink disk hubs

- Single-jointed coupling
- Double-jointed coupling short

On this design, the hub body is made of aluminium and the ring of phosphated, annealed steel. The design is constructionally identical to the P-design (page 19). The symmetry, the absence of keyways and radial bores produces an optimum shaft run-out. Therefore, much higher speeds are possible compared to the other hub designs (please observe Diagram 1 “Balancing the shrink disk hub”, page 31).

The torque is transmitted via frictional locking onto the shaft.
Please observe the maximum permitted torques (page 27).

Page 16

ROBA®-ES with steel shrink disk hubs

- Single-jointed coupling
- Double-jointed coupling short

On this design, the hub body is made of steel (oiled) and the ring of phosphated, annealed steel. This design is available in a standard variant and a variant according to DIN 69002. The DIN variant has an elastomeric element with a central, standardised bore and standardised bore diameters in the hubs. The DIN variant is conceived for use in short bore spindles and multi-spindle heads. Because of the steel hubs, this DIN design combines robustness with precision. This design should be selected in preference to others, in particular on applications with heavily pulsating or alternating loads.
Please observe the maximum permitted torques (page 27).

Page 18

ROBA®-ES with expansion hub and clamping hub

- Single-jointed coupling

ROBA®-ES couplings with an expansion hub have been designed for frictionally-locking torque transmission onto hollow shafts. The expansion hubs are combined with clamping hubs on the opposite side as a standard measure. Other combinations with other hubs are conceivable.

The stated diameters of the expansion hubs are preferred dimensions.

Other diameters can be requested at *mayr*® power transmission.

Please observe the maximum permitted torques (page 29).

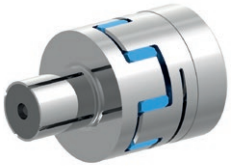

Page 20

Coupling Dimensioning Page 22

Technical Explanations Page 24

Size	Torques – Elastomeric element hardness: 80 Sh A (blue)		92 Sh A (yellow)		98 Sh A (red)		64 Sh D (green)		72 Sh D (grey)	
	T_{KN} [Nm]	$T_{K\,max}$ [Nm]	T_{KN} [Nm]	$T_{K\,max}$ [Nm]	T_{KN} [Nm]	$T_{K\,max}$ [Nm]	T_{KN} [Nm]	$T_{K\,max}$ [Nm]	T_{KN} [Nm]	$T_{K\,max}$ [Nm]
14	4	8	8	16	13	26	16	32	-	-
19	5	10	10	20	17	34	21	42	27	54
24	17	34	35	70	60	120	75	150	95	190
28	46	92	95	190	160	320	200	400	260	520
38	95	190	190	380	325	650	405	810	525	1050
42	125	250	265	530	450	900	560	1120	725	1450
48	150	300	310	620	525	1050	655	1310	850	1700
55	200	400	410	820	685	1370	825	1650	-	-
65	450	900	900	1800	1040	2080	1250	2500	-	-

Technical Explanations (transmittable torques) Page 27

ROBA®-ES elastomer couplings Type 94_._ _ _

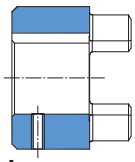

Key hub
Type 94_._2_

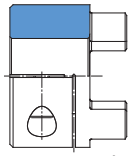

Clamping hub [1] / Clamping hub Compact
Type 94_._0_ / 94_._5_

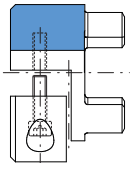

Split clamping hub [1]
Type 94_._3_

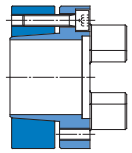

Shrink disk hub
Type 94_._1_

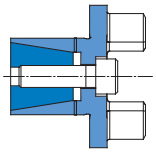

Expansion hub
Type 94_._4_

Elastomeric element
Hardness [Shore]

80 SH A | 92 SH A | 98 SH A | 64 Sh D | 72 Sh D

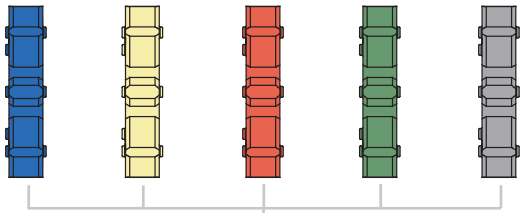

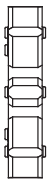

Single-jointed coupling
Type 940._ _ _

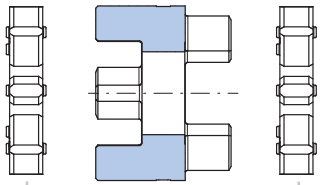

Double-jointed coupling,
short
Type 942._ _ _

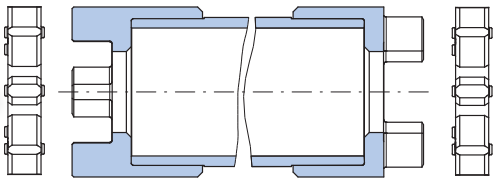

Double-jointed coupling
with sleeve
(variable length)
Type 943._ _ _

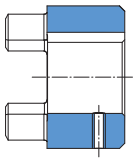

Key hub
Type 94_._ _2

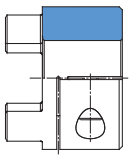

Clamping hub [1] / Clamping hub Compact
Type 94_._ _0 / 94_._ _5

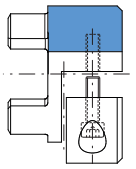

Split clamping hub [1]
Type 94_._ _3

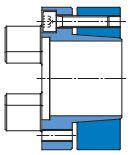

Shrink disk hub
Type 94_._ _1

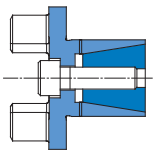

Expansion hub
Type 94_._ _4

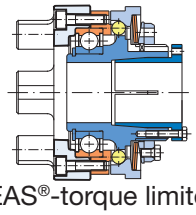

EAS®-torque limiter

[1] If required also available with keyway

ROBA®-ES with key hubs

Sizes 14 to 65

Single-jointed coupling / Type 940._ 22._

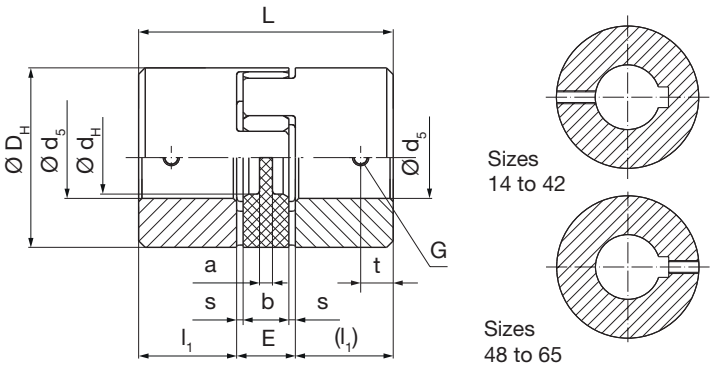

The adjusting screw is offset by 180° to the keyway on Sizes 14 to 42 (see Fig. above).

Technical Data and Main Dimensions			Size								
			14	19	24	28	38	42	48	55	65
Minimum hub bore [1) 2)]	$d_5{}^{H7}{}_{min}$	[mm]	6	6	8	10	12	14	20	20	38
Maximum hub bore [1) 2)]	$d_5{}^{H7}{}_{max}$	[mm]	15	24	28	38	45	55	60	70	80
Maximum speed [3) 4)]	n_{max}	[rpm]	19000	14000	10600	8500	7100	6000	5600	5000	4600

Mass moments of inertia J [10^{-3} kgm²] [5) 6)]

Size	14	19	24	28	38	42	48	55	65
Elastomeric element	0.0005	0.0012	0.0067	0.0154	0.042	0.09	0.143	0.248	0.474
Key hub	0.0026	0.0175	0.0781	0.169	0.498	3.093	5.173	10.096	18.524
Single-joint short	0.0057	0.0362	0.1629	0.3534	1.038	6.276	10.489	20.44	37.522
Sleeve with H_S = 1000 mm	0.075	0.27	0.74	1.33	2.42	14.33	29.7	48.94	71.43
Sleeve with 1000 mm tube	0.071	0.236	0.676	1.202	1.917	10.676	24.89	41.167	54.082

Weights [kg] [5) 6)]

Size	14	19	24	28	38	42	48	55	65
Elastomeric element	0.0048	0.007	0.019	0.037	0.054	0.081	0.104	0.149	0.216
Key hub	0.018	0.064	0.161	0.236	0.47	2.03	2.792	4.136	5.95
Single-joint short	0.041	0.135	0.341	0.509	0.994	4.141	5.688	8.421	12.116
Sleeve with H_S = 1000 mm	0.595	1.036	1.323	1.631	2.101	9.429	15.764	18.009	21.351
Sleeve with 1000 mm tube	0.574	0.86	1.22	1.477	1.705	7.383	13.561	15.193	16.622

Dimensions	Size								
	14	19	24	28	38	42	48	55	65
a	2	4	4	5	5	5	5	9	8
b	10	12	14	15	18	20	21	22	26
D_H	30	40	55	65	80	95	105	120	135
d_H	10.5	18	27	30	38	46	51	60	68
E	13	16	18	20	24	26	28	30	35
G	M4	M5	M5	M6	M8	M8	M8	M10	M10
L	35	66	78	90	114	126	140	160	185
L_2	56	92	112	128	158	174	192	218	252
L_3	dependent on H_S								
l_1	11	25	30	35	45	50	56	65	75
l_2	34	42	52	58	68	74	80	88	102
$H_{S\,min}$	68	87	101	115	143	162	178	200	230
$H_{S\,max}$	2000	2000	2000	2000	2000	2000	2000	3000	3000
s	1.5	2.0	2.0	2.5	3.0	3.0	3.5	4.0	4.5
t	5	10	10	15	15	20	25	20	20

We reserve the right to make dimensional and constructional alterations.

Stock program	Size				
Bore	14	19	24	28	38
Ø6					
Ø8	x				
Ø9					
Ø10	x	x			
Ø11	x				
Ø12	x	x			
Ø14	x	x	x		
Ø15		x	x		
Ø16		x	x		
Ø17					
Ø18		x	x		
Ø19		x	x	x	
Ø20		x	x	x	x
Ø22				x	
Ø24			x	x	
Ø25			x	x	x
Ø28				x	
Ø30				x	x
Ø32				x	x
Ø35					x
Ø38					x

ROBA®-ES with key hubs

Sizes 14 to 65

Double-jointed coupling short / Type 942._ 22._

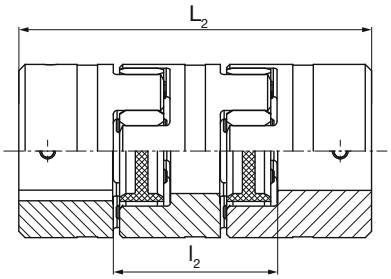

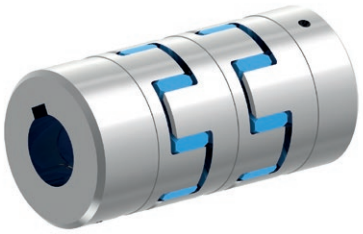

Double-jointed coupling with sleeve / Type 943._22._

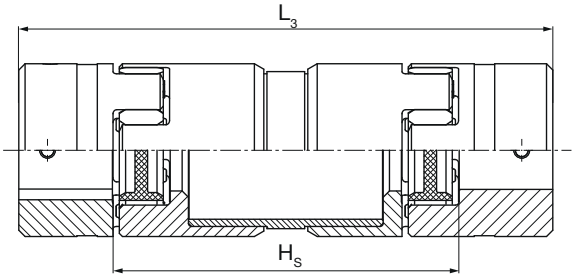

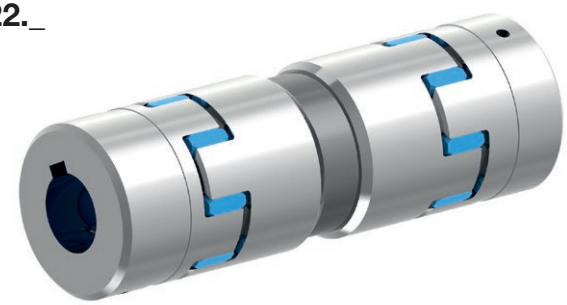

Order Number

0	Single-jointed coupling	**Sleeve length H_S [mm]**
2	Double-jointed coupling short	
3	Double-jointed coupling with sleeve	

__ / 9 4 __ . __ 2 2 . __ / __ / __ / __ / __

Size 14 to 65 [7]	**Elastomeric element hardness**			Aluminium design up to Size 38 / Steel design from Size 42		**Bore ø d_5^{H7}** (see Table)	**Bore ø d_5^{H7}** (see Table)	**Operating speed n_S [rpm]** for sleeve
		98 Sh A (red)	**0**		A			
		92 Sh A (yellow)	**1**					
		80 Sh A (blue)	**5**					
		64 Sh D (green)	**6**		F			
		72 Sh D (grey)	**7**					

Example: 42 / 940.022.F / Ød$_5$ 30 / Ød$_5$ 30

1) Recommended hub / shaft tolerance: H7 / k6
2) In order to dimension the shaft-hub connection, the calculation procedure acc. DIN 6892 is to be applied For the calculation, please take the yield point Rp 0.2 = 200 N/mm² for aluminium and the yield strength Re = 350 N/mm² for steel.
3) Also applicable for double-jointed design
4) Not valid for designs with sleeve (see diagram: “Permitted speeds for sleeve” on page 26)
5) Mass moments of inertia and weights are valid for one elastomeric element
6) Mass moments of inertia and weights are valid for maximum bore
7) Further Sizes available on request

ROBA®-ES with clamping hubs

Sizes 14 to 65

Single-jointed coupling / Type 940._ 00._

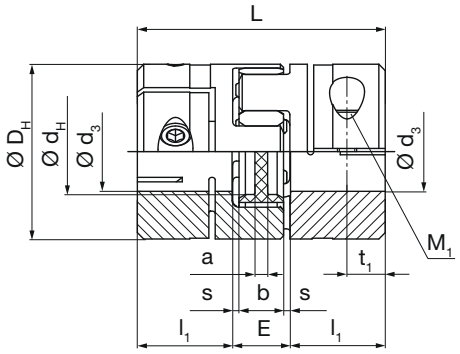

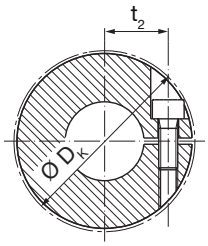

Technical Data and Main Dimensions			Size								
			14	19	24	28	38	42	48	55	65
Minimum hub bore [1) 2)]	$d_3^{F7}{}_{min}$	[mm]	6	10	15	19	20	28	35	40	45
Maximum hub bore [1) 2)]	$d_3^{F7}{}_{max}$	[mm]	15	20	28	35	45	50	55	70	80
Maximum speed [3) 4)]	n_{max}	[rpm]	12600	9300	7000	5600	4700	4000	3700	3300	3000
Tightening torque clamping screws	T_A	[Nm]	1.4	10	10	25	25	70	120	120	200

Mass moments of inertia J [10^{-3} kgm²] [5) 6)]

Size	14	19	24	28	38	42	48	55	65
Elastomeric element	0.0005	0.0012	0.0067	0.0154	0.042	0.09	0.143	0.248	0.474
Clamping hub	0.0028	0.0193	0.076	0.168	0.481	3.104	5.176	9.742	17.985
Single-joint short	0.0061	0.0398	0.1587	0.3514	1.004	6.298	10.495	19.732	36.444
Sleeve with H_S = 1000 mm	0.075	0.27	0.74	1.33	2.42	14.33	29.7	48.94	71.43
Sleeve with 1000 mm tube	0.071	0.236	0.676	1.202	1.917	10.676	24.89	41.167	54.082

Weights [kg] [5) 6)]

Size	14	19	24	28	38	42	48	55	65
Elastomeric element	0.0048	0.007	0.019	0.037	0.054	0.081	0.104	0.149	0.216
Clamping hub	0.02	0.077	0.159	0.245	0.456	2.134	2.922	4.021	5.818
Single-joint short	0.0448	0.161	0.337	0.527	0.966	4.349	5.948	8.191	11.852
Sleeve with H_S = 1000 mm	0.595	1.036	1.323	1.631	2.101	9.429	15.764	18.009	21.351
Sleeve with 1000 mm tube	0.574	0.86	1.22	1.477	1.705	7.383	13.561	15.193	16.622

Dimensions	Size								
	14	19	24	28	38	42	48	55	65
a	2	3	4	5	6	6	5	9	8
b	10	12	14	15	18	20	21	22	26
D_H	30	40	55	65	80	95	105	120	135
D_K	32.2	47	58.5	71	83.3	98.8	108	122	139
d_H	10.5	18	27	30	38.5	46	51	60	68
E	13	16	18	20	24	26	28	30	35
L	35	66	78	90	114	126	140	160	185
L_2	56	92	112	128	158	174	192	218	252
L_3	dependent on H_S								
l_1	11	25	30	35	45	50	56	65	75
l_2	34	42	52	58	68	74	80	88	102
$H_{S\,min}$	68	87	101	115	143	162	178	200	230
$H_{S\,max}$	2000	2000	2000	2000	2000	2000	2000	3000	3000
M_1	M3	M6	M6	M8	M8	M10	M12	M12	M14
s	1.5	2	2	2.5	3	3	3.5	4	4.5
t_1	5.5	12	12	13.5	20	20	21	26	27.5
t_2	11	14	21	24.5	30	34	36	45	52

Stock program	Size				
Bore	14	19	24	28	38
Ø6					
Ø7					
Ø8	x				
Ø9	x				
Ø10	x	x			
Ø11	x	x			
Ø12	x	x			
Ø14	x	x			
Ø15	x	x	x		
Ø16		x	x		
Ø17					
Ø18			x		
Ø19		x	x	x	
Ø20		x	x	x	
Ø22			x	x	
Ø24			x	x	
Ø25			x	x	x
Ø28			x	x	
Ø30				x	
Ø32				x	x
Ø35					x
Ø38					x
Ø40					x

We reserve the right to make dimensional and constructional alterations.

ROBA®-ES with clamping hubs

Sizes 14 to 65

Double-jointed coupling short / Type 942._ 00._

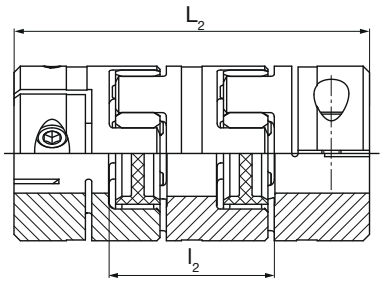

Double-jointed coupling with sleeve / Type 943._00._

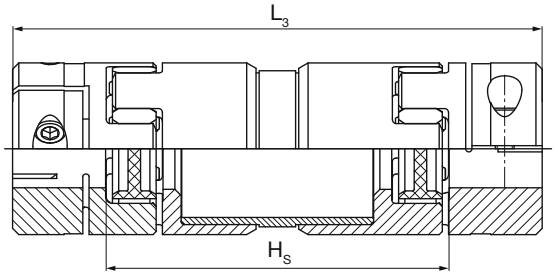

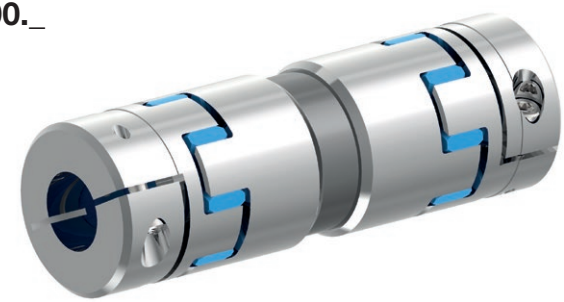

Order Number

ROBA®-ES with clamping hubs Compact — Sizes 14 to 38

Single-jointed coupling / Type 940._ 55._

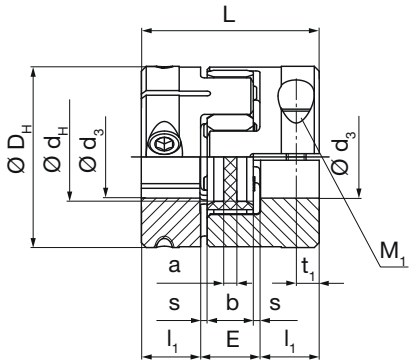

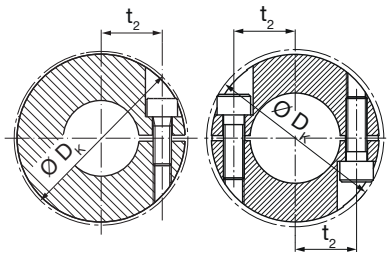

Sizes 14 and 19 — Sizes 24 to 38

Technical Data and Main Dimensions			Size				
			14	19	24	28	38
Minimum hub bore [1) 2)]	$d_3^{F7}{}_{min}$	[mm]	5	8	10	14	15
Maximum hub bore [1) 2)]	$d_3^{F7}{}_{max}$	[mm]	12	20	32	35	45
Maximum speed [3) 4)]	n_{max}	[rpm]	12600	9300	7000	5600	4700
Tightening torque clamping screws	T_A	[Nm]	3	10	10	25	48

Mass moments of inertia J [10^{-3} kgm²] [5) 6)]

Size	14	19	24	28	38
Elastomeric element	0.0005	0.0012	0.0067	0.0154	0.042
Clamping hub	0.0025	0.0139	0.0493	0.1174	0.328
Single-joint short	0.0055	0.029	0.1053	0.2502	0.698
Sleeve with H_S = 1000 mm	0.075	0.27	0.74	1.33	2.42
Sleeve with 1000 mm tube	0.071	0.236	0.676	1.202	1.917

Weights [kg] [5) 6)]

Size	14	19	24	28	38
Elastomeric element	0.0048	0.007	0.019	0.037	0.054
Clamping hub	0.0192	0.055	0.098	0.173	0.311
Single-joint short	0.0432	0.117	0.215	0.383	0.676
Sleeve with H_S = 1000 mm	0.595	1.036	1.323	1.631	2.101
Sleeve with 1000 mm tube	0.574	0.86	1.22	1.477	1.705

Dimensions	Size				
	14	19	24	28	38
a	2	3	4	5	6
b	10	12	14	15	18
D_H	30	40	55	65	80
D_K	31	46	58.5	71	86
d_H	10.5	18	27	30	38.5
E	13	16	18	20	24
L	32	50	54	62	76
L_2	53	76	88	100	120
L_3	dependent on H_S				
l_1	9.5	17	18	21	26
l_2	34	42	52	58	68
$H_{S\,min}$	68	87	101	115	143
$H_{S\,max}$	2000	2000	2000	2000	2000
M_1	M4	M6	2xM6	2xM8	2xM10
s	1.5	2	2	2.5	3
t_1	5	8	7	9	10
t_2	9.6	14	21	24.5	30.5

Stock program	Size				
Bore	14	19	24	28	38
Ø6					
Ø7					
Ø8	x				
Ø9	x				
Ø10	x	x			
Ø11	x	x			
Ø12	x	x			
Ø14		x			
Ø15		x	x		
Ø16		x	x		
Ø17					
Ø18			x		
Ø19			x	x	
Ø20			x	x	
Ø22			x	x	
Ø24			x	x	
Ø25			x	x	x
Ø28			x	x	
Ø30				x	
Ø32				x	x
Ø35					x
Ø38					x
Ø40					x

We reserve the right to make dimensional and constructional alterations.

ROBA®-ES with clamping hubs Compact

Sizes 14 to 38

Double-jointed coupling short / Type 942._ 55._

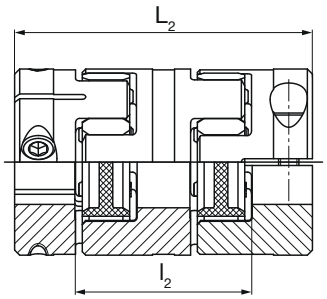

Double-jointed coupling with sleeve / Type 943._55._

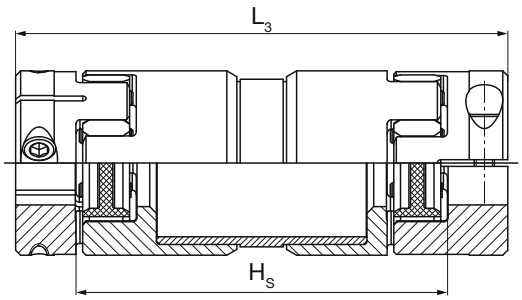

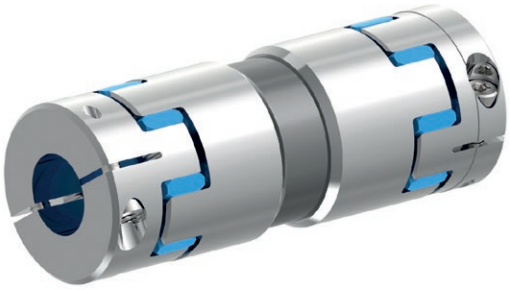

Order Number

0	Single-jointed coupling
2	Double-jointed coupling short
3	Double-jointed coupling with sleeve

Sleeve length H_s [mm]

__ / 9 4 __ . __ 5 5 . __ / __ / __ / __ / __

Size 14 to 38 [7]	**Elastomeric element hardness**	98 Sh A (red)	**0**	Aluminium design up to Size 38	A	**Bore ø d_3^{F7}** (see Table)	**Bore ø d_3^{F7}** (see Table)	**Operating speed n_s** [rpm] for sleeve
		92 Sh A (yellow)	**1**					
		80 Sh A (blue)	**5**					
		64 Sh D (green)	**6**					
		72 Sh D (grey)	**7**					

Example: 38 / 940.055.A / Ød_3 30 / Ød_3 30

1) Recommended hub / shaft tolerance: F7 / k6
2) Transmittable torques dependent on bore, see page 28.
3) Also applicable for double-jointed design
4) Not valid for designs with sleeve (see diagram: “Permitted speeds for sleeve” on page 26)
5) Mass moments of inertia and weights are valid for one elastomeric element
6) Mass moments of inertia and weights are valid for maximum bore
7) Further Sizes available on request

ROBA®-ES with split clamping hubs

Sizes 14 to 65

Single-jointed coupling / Type 940._ 33._

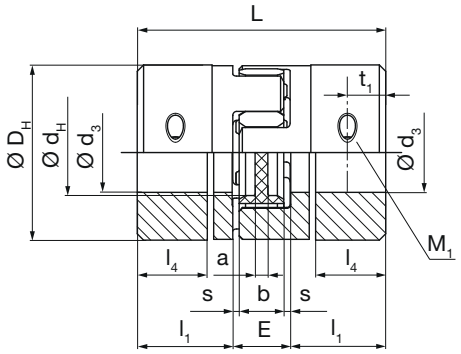

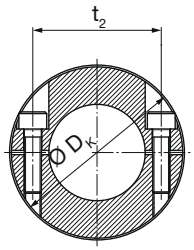

Technical Data and Main Dimensions			Size								
			14	19	24	28	38	42	48	55	65
Minimum hub bore [1) 2)]	$d_3^{H7}{}_{min}$	[mm]	8	8	10	14	18	22	22	40	45
Maximum hub bore [1) 2)]	$d_3^{H7}{}_{max}$	[mm]	15	20	28	35	45	50	55	70	80
Maximum speed [3) 4)]	n_{max}	[rpm]	12600	9300	7000	5600	4700	4000	3700	3300	3000
Tightening torque clamping screws	T_A	[Nm]	1.4	10	10	25	25	48	84	84	84

Mass moments of inertia J [10^{-3} kgm²] [5) 6)]

Size	14	19	24	28	38	42	48	55	65
Elastomeric element	0.0005	0.0012	0.0067	0.0154	0.042	0.09	0.143	0.248	0.474
Split clamping hub	0.0041	0.0193	0.077	0.176	0.5003	3.045	5.051	9.536	17.693
Single-joint short	0.0087	0.0398	0.1607	0.3674	1.0426	6.18	10.245	19.32	35.86
Sleeve with H_S = 1000 mm	0.075	0.27	0.74	1.33	2.42	14.33	29.7	48.94	71.43
Sleeve with 1000 mm tube	0.071	0.236	0.676	1.202	1.917	10.676	24.89	41.167	54.082

Weights [kg] [5) 6)]

Size	14	19	24	28	38	42	48	55	65
Elastomeric element	0.0048	0.007	0.019	0.037	0.054	0.081	0.104	0.149	0.216
Split clamping hub	0.0294	0.076	0.16	0.258	0.475	2.104	2.867	3.95	5.737
Single-joint short	0.0636	0.159	0.339	0.553	1.004	4.289	5.838	8.049	11.69
Sleeve with H_S = 1000 mm	0.595	1.036	1.323	1.631	2.101	9.429	15.764	18.009	21.351
Sleeve with 1000 mm tube	0.574	0.86	1.22	1.477	1.705	7.383	13.561	15.193	16.622

Dimensions	Size								
	14	19	24	28	38	42	48	55	65
a	2	3	4	5	6	6	5	9	8
b	10	12	14	15	18	20	21	22	26
D_H	30	40	55	65	80	95	105	120	135
D_K	32.2	47	58.5	71	83	99	106.5	122	136
d_H	10.5	18	27	30	38.5	46	51	60	68
E	13	16	18	20	24	26	28	30	35
L	50	66	78	90	114	126	140	160	185
L_2	71	92	112	128	158	174	192	218	252
L_3	dependent on L_R								
$L_{R\,min}$	76.5	103	117	133	169	184	204	223	267
$L_{R\,max}$	2008.5	2016	2016	2018	2026	2022	2026	3023	3037
l_1	18.5	25	30	35	45	50	56	65	75
l_2	34	42	52	58	68	74	80	88	102
$H_{S\,min}$	68	87	101	115	143	162	178	200	230
$H_{S\,max}$	2000	2000	2000	2000	2000	2000	2000	3000	3000
l_4	14.25	17	22	26	32	39	43	53.5	56.5
M_1	M3	M6	M6	M8	M8	M10	M12	M12	M12
s	1.5	2	2	2.5	3	3	3.5	4	4.5
t_1	7	8.5	12	13.5	16	20	22	26	27.5
t_2	22	28	42	49	60	72	72	90	104

We reserve the right to make dimensional and constructional alterations.

ROBA®-ES with split clamping hubs

Sizes 14 to 65

Double-jointed coupling short / Type 942._33._

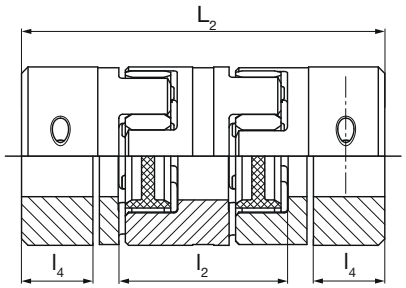

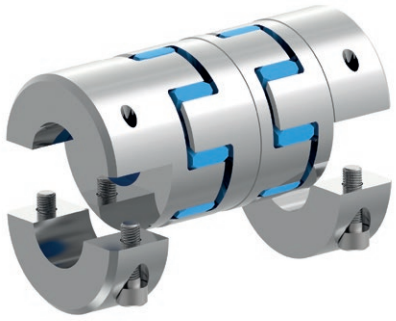

Double-jointed coupling with sleeve / Type 943._33._

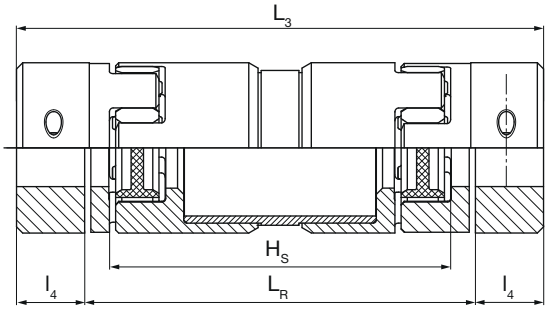

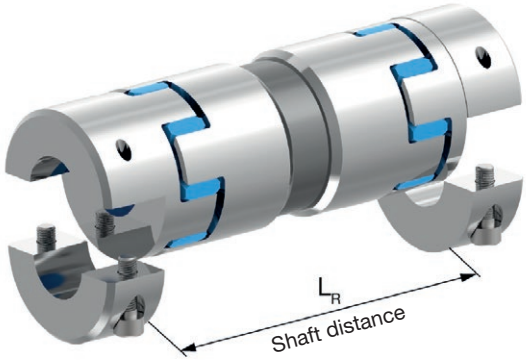

Order Number

0	Single-jointed coupling		**Shaft distance** L_R [mm]
2	Double-jointed coupling short		
3	Double-jointed coupling with sleeve		

__ / 9 4 __ . __ 3 3 . __ / __ / __ / __ / __

Size 14 to 65 [7]	**Elastomeric element hardness**			Aluminium design up to Size 38 / Steel design from Size 42		**Bore ø** d_3^{H7} (see Table)	**Bore ø** d_3^{H7} (see Table)	**Operating speed** n_S [rpm] for sleeve
		98 Sh A (red)	**0**		A			
		92 Sh A (yellow)	**1**					
		80 Sh A (blue)	**5**		F			
		64 Sh D (green)	**6**					
		72 Sh D (grey)	**7**					

Example: 42 / 940.033.F / Ød$_3$ 30 / Ød$_3$ 30

1) Recommended hub / shaft tolerance: H7 / g6
2) Transmittable torques dependent on bore, see page 29.
3) Also applicable for double-jointed design
4) Not valid for designs with sleeve (see diagram: “Permitted speeds for sleeve” on page 26)
5) Mass moments of inertia and weights are valid for one elastomeric element
6) Mass moments of inertia and weights are valid for maximum bore
7) Further Sizes available on request

ROBA®-ES with aluminium shrink disk hubs — Sizes 14 to 38

Single-jointed coupling / Type 940._ 11.A

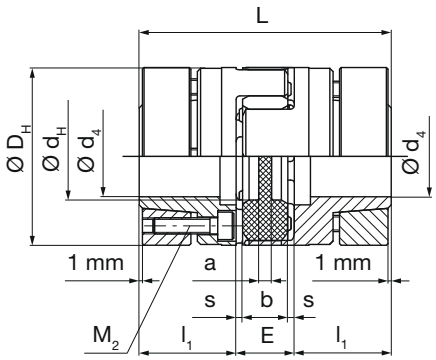

Technical Data and Main Dimensions			Size				
			14	19	24	28	38
Minimum hub bore [1) 2)]	d_4 H7 min	[mm]	6	10	15	19	20
Maximum hub bore [1) 2)]	d_4 H7 max	[mm]	14	20	28	38	45
Maximum speed [3)]	n_{max}	[rpm]	28000	21000	15500	13200	10500
Tightening torque clamping screws	T_A	[Nm]	1.3	3	6	6	10

Mass moments of inertia J [10^{-3} kgm²] [4) 5)]

Size	14	19	24	28	38
Elastomeric element	0.0005	0.0012	0.0067	0.0154	0.042
Shrink disk hub	0.0065	0.0313	0.134	0.304	0.929
Single-joint short	0.0135	0.0638	0.2747	0.6234	1.9

Weights [kg] [4) 5)]

Size	14	19	24	28	38
Elastomeric element	0.0048	0.007	0.019	0.037	0.054
Shrink disk hub	0.046	0.12	0.271	0.412	0.852
Single-joint short	0.0968	0.247	0.561	0.861	1.758

Dimensions	Size				
	14	19	24	28	38
a	2	3	4	5	6
b	10	12	14	15	18
D_H	30	40	55	65	80
d_H	10.5	18	27	30	38.5
E	13	16	18	20	24
L	50	66	78	90	114
L_2	71	92	112	128	158
l_1	18.5	25	30	35	45
l_2	34	42	52	58	68
M_2	4xM3	6xM4	4xM5	8xM5	8xM6
s	1.5	2	2	2.5	3

We reserve the right to make dimensional and constructional alterations.

Stock program	Size				
Bore	14	19	24	28	38
Ø10	x				
Ø11	x				
Ø12	x	x			
Ø14	x	x			
Ø15		x	x		
Ø16		x	x		
Ø18			x		
Ø19		x	x		
Ø20		x	x	x	
Ø22			x	x	
Ø24			x	x	x
Ø25			x	x	x
Ø28			x	x	x
Ø30				x	x
Ø32				x	x
Ø35				x	x
Ø38					x
Ø40					

ROBA®-ES with aluminium shrink disk hubs

Sizes 14 to 38

Double-jointed coupling short / Type 942._ 11.A

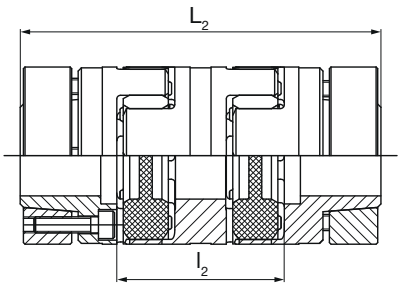

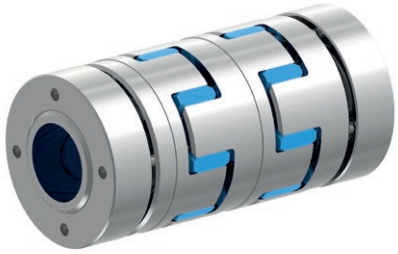

Order Number

0	Single-jointed coupling
2	Double-jointed coupling short

__ / 9 4 __ . __ 1 1 . __ / __ / __

Size	Elastomeric element hardness			Aluminium design		Bore ø d_4^{H7}	Bore ø d_4^{H7}
14 to 38 [6]	**Elastomeric element hardness**	98 Sh A (red)	**0**	Aluminium design	A	**Bore ø d_4^{H7}** (see Table)	**Bore ø d_4^{H7}**
		92 Sh A (yellow)	**1**				
		80 Sh A (blue)	**5**				
		64 Sh D (green)	**6**				
		72 Sh D (grey)	**7**				

Example: 38 / 940.011.A / Ød$_4$ 30 / Ød$_4$ 30

1) Recommended hub / shaft tolerance: H7 / k6
2) Transmittable torques dependent on bore, see page 27.
3) Also applicable for double-jointed design
4) Mass moments of inertia and weights are valid for one elastomeric element
5) Mass moments of inertia and weights are valid for maximum bore
6) Further Sizes available on request

ROBA®-ES with steel shrink disk hubs — Sizes 14-32 to 65

Single-jointed coupling / Type 940._ 11._

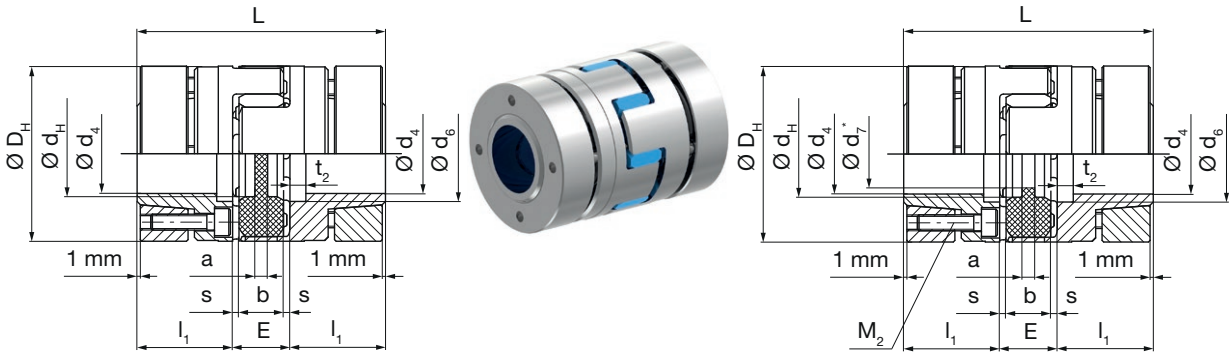

Type 940._11.P – Sizes 14 to 38
Type 940._11.F – Sizes 42 to 65

Type 940.011.P
Sizes 14-32 to 28 acc. DIN 69002

Technical Data and Main Dimensions				Size										
				14-32	19-37.5	19	24-50	24	28	38	42	48	55	65
Minimum hub bore [1) 2)]		$d_{4\,min}$	[mm]	6	10	10	15	16	19	22	28	35	40	45
Maximum hub bore [1) 2)]		$d_{4\,max}$	[mm]	14	16	20	24	28	38	45	50	60	70	75
DIN-bore [3)]		d_4	[mm]	14	16	19	24	25	35	-	-	-	-	-
Maximum speed	Single-joint	n_{max}	[rpm]	28000	21000	21000	15500	15500	13200	10500	9000	8000	6300	5600
	Double-joint short	n_{max}	[rpm]	-	-	-	-	-	-	-	9000	8000	6300	5600
Tightening torque clamping screws		T_A	[Nm]	1.3	3.0	3.0	6.0	6.0	6.0	10	30	52	58	100

Mass moments of inertia J [10^{-3} kgm²] [4) 5)]

Size	14-32	19-37.5	19	24-50	24	28	38	42	48	55	65
Elastomeric element	0.0005	0.0012	0.0012	0.0067	0.0067	0.0154	0.042	0.09	0.143	0.248	0.474
Shrink disk hub	0.0128	0.0368	0.0471	0.136	0.202	0.433	1.332	2.948	4.809	9.099	17.287
Single-joint short	0.0261	0.0748	0.0954	0.2787	0.4107	0.8814	2.706	5.986	9.761	18.446	35.048

Weights [kg] [4) 5)]

Size	14-32	19-37.5	19	24-50	24	28	38	42	48	55	65
Elastomeric element	0.0048	0.007	0.007	0.019	0.019	0.037	0.054	0.081	0.104	0.149	0.216
Shrink disk hub	0.086	0.174	0.185	0.348	0.418	0.606	1.256	2.022	2.62	3.754	5.766
Single-joint short	0.1768	0.355	0.377	0.715	0.855	1.249	2.566	4.125	5.344	7.657	11.748

Dimensions	Size										
	14-32	19-37.5	19	24-50	24	28	38	42	48	55	65
a	2	4	4	4	4	5	5	5	5	9	8
b	10	12	12	14	14	15	18	20	21	22	26
D_H	32	37.5	40	50	55	65	80	95	105	120	135
d_H	10.5	18	18	27	27	30	38	46	51	60	68
d_6	17	19	22	29	30	40	46	55	60	72	77
d_7 [3)]	8.5	9.5	9.5	12.5	12.5	14.5	-	-	-	-	-
E	13	16	16	18	18	20	24	26	28	30	35
L	50	66	66	78	78	90	114	126	140	160	185
L_2	-	-	-	-	-	-	-	174	192	218	252
l_1	18.5	25	25	30	30	35	45	50	56	65	75
l_2	-	-	-	-	-	-	-	74	80	88	102
M_2	4 x M3	6 x M4	6 x M4	4 x M5	4 x M5	8 x M5	8 x M6	4 x M8	4 x M10	4 x M10	4 x M12
s	1.5	2.0	2.0	2.0	2.0	2.5	3.0	3.0	3.5	4.0	4.5
t_2	3	4	4	5	5	5	5	5	6	7	7

We reserve the right to make dimensional and constructional alterations.

ROBA®-ES with steel shrink disk hubs

Sizes 14-32 to 65

Double-jointed coupling short / Type 942._ 11._

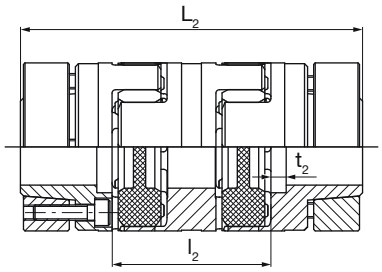

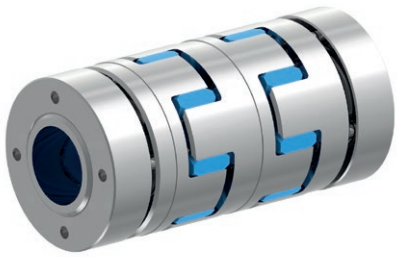

Order Number

		Bore ø
0	Single-jointed coupling	d_4^{H6} up to Size 38 / d_4^{H7} from Size 42 (see Table)
2	Double-jointed coupling short [6]	

__ / 9 4 __ . __ 1 1 . __ / __ / __ / __

Size 14-32 to 65 [7]	Elastomeric element hardness			Steel design		Bore ø	Design
		98 Sh A (red)	**0**	Steel design up to Size 38	P	d_4^{H6} up to Size 38 / d_4^{H7} from Size 42 (see Table)	- DIN
		92 Sh A (yellow)	**1**				- No values for standard
		80 Sh A (blue)	**5**	Steel design from Size 42	F		
		64 Sh D (green)	**6**				
		72 Sh D (grey)	**7**				

Example: 42 / 940.011.F / Ød$_4$ 30 / Ød$_4$ 30

1) Recommended hub / shaft tolerance: H6 / k6, from Size 42: H7 / k6
2) Transmittable torques dependent on bore, see page 27.
3) Elastomeric elements with DIN bores only available with 98 Sh A (red), Type 940.011.P
4) Mass moments of inertia and weights are valid for one elastomeric element
5) Mass moments of inertia and weights are valid for maximum bore
6) Double-joint designs are only available from Size 42.
7) Further Sizes available on request

ROBA®-ES with expansion hub and clamping hub — Sizes 14 to 28

Single-jointed coupling / Type 940._ 04._

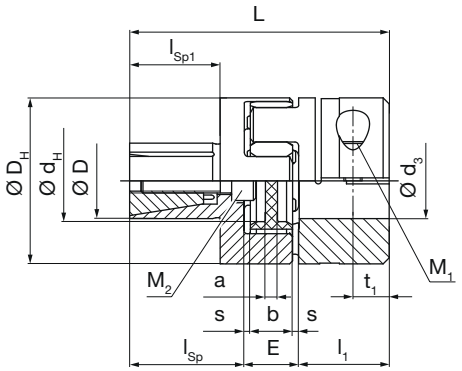

Technical Data and Main Dimensions			Size			
			14	19	24	28
Minimum hub bore [1) 2)]	$d_3^{F7}{}_{min}$	[mm]	6	6	8	10
Maximum hub bore [1) 2)]	$d_3^{F7}{}_{max}$	[mm]	15	20	28	35
Diameter expansion hub	D_{h7}	[mm]	12	20	25	35
Maximum speed	n_{max}	[rpm]	12600	9300	7000	5600
Tightening torque M_2	T_A	[Nm]	5.8	10.1	24	48

Mass moments of inertia J [10^{-3} kgm²] [3) 4)]

Size	14	19	24	28
Elastomeric element	0.0005	0.0012	0.0067	0.0154
Clamping hub	0.0028	0.0193	0.076	0.168
Expansion hub	0.0019	0.0097	0.043	0.081
Single-joint short	0.0052	0.0302	0.1257	0.2644

Weights [kg] [3) 4)]

Size	14	19	24	28
Elastomeric element	0.0048	0.007	0.019	0.037
Clamping hub	0.02	0.076	0.159	0.245
Expansion hub	0.023	0.071	0.188	0.286
Single-joint short	0.0478	0.154	0.366	0.568

Dimensions	Size			
	14	19	24	28
a	2	3	4	5
b	10	12	14	15
D_H	30	40	55	65
D_K	32.2	47	58.5	71
d_H	10.5	18	27	30
E	13	16	18	20
L	42.5	69	86	99
l_1	11	25	30	35
l_{Sp}	18.5	28	38	44
l_{Sp1}	12.5	20	30	36
M_1	M3	M6	M6	M8
M_2	M5	M6	M8	M10
s	1.5	2	2	2.5
t_1	5.5	12	12	13.5

We reserve the right to make dimensional and constructional alterations.

Order Number

0	Single-jointed coupling

__ / 9 4 __ . __ 0 4 . __ / __ / __

Size 14 to 28 [5]	**Elastomeric element hardness**	98 Sh A (red)	**0**	Aluminium design	A	**ø D_{h7}** (see Table)	**Bore ø d_3^{F7}** (see Table)
		92 Sh A (yellow)	**1**				
		80 Sh A (blue)	**5**				
		64 Sh D (green)	**6**				
		72 Sh D (grey)	**7**				

Example: 28 / 940.004.A / ØD 35 / Ød_3 30

1) Recommended fit connection for expansion hub: H7 / h7
2) Transmittable torques dependent on bore, see page 29.
3) Mass moments of inertia and weights are valid for one elastomeric element
4) Mass moments of inertia and weights are valid for maximum bore
5) Further Sizes available on request

ROBA®-ES Coupling Dimensioning

1. Approximate calculation of the coupling torque:

1.1. **T_N from the nominal power**

$$T_N = \frac{9550 \times P_{AN/LN}}{n}$$

1.2. **Dynamic torques T_S and T_W (5.1 and 5.2):**

Drive-side excitation:

Peak torque: $T_S = T_{AS} \times \frac{J_L}{J_A + J_L} \times S_A$

Alternating torque : $T_W = T_{AW} \times \frac{J_L}{J_A + J_L} \times V_R$

Load-side excitation:

Peak torque : $T_S = T_{LS} \times \frac{J_A}{J_A + J_L} \times S_L$

Alternating torque: $T_W = T_{LW} \times \frac{J_A}{J_A + J_L} \times V_R$

2. Comparison of torques occurring in the coupling with the permitted torques

The coupling must be dimensioned so that the loads occurring do not exceed the permitted values in any operating state.

2.1. **Load due to nominal torque**

$$T_{KN} \geq T_N \times S_\delta$$

2.2. **Load due to torque impacts (5.3)**

$$T_{K\,max} \geq T_S \times S_Z \times S_\delta + T_N \times S_\delta$$

2.3. **Load due to resonance passing through (5.4)**

$$T_{K\,max} \geq T_S \times S_Z \times S_\delta \times V_R + T_N \times S_\delta$$

2.4. **Load due to constantly alternating torque – cycle operation (5.5 and 5.6)**
Permitted alternating torque on coupling:

$T_{KW} = 0.25 \times T_{KN}$ (for aluminium hubs)

$T_{KW} = 0.35 \times T_{KN}$ (for steel hubs)

$$T_{KW} \geq T_W \times S_\delta \times S_f$$

3. Inspection of permitted misalignments

$$\Delta K_a \geq \Delta W_a \times S_\delta$$

$$\Delta K_r \geq \Delta W_r \times S_\delta \times S_n$$

$$\Delta K_w \geq \Delta W_w \times S_\delta \times S_n$$

If more than one kind of misalignment occurs at the same time, please observe Fig. 2 (page 30).

4. Frictional locking inspection on hub connection

$T_R > T_{max}$: T_{max} is the maximum torque occurring in the coupling.

Values for T_R can be found on pages 27 to 29.

5. Explanations

5.1. The torque determination on the coupling is applicable if the shaft coupling in the system is the torsionally softest element, and therefore the system can be considered as a double-mass oscillator. If this is not the case, the calculation of the torque on the coupling requires a more detailed calculation procedure.

5.2. The impact factors S_A / S_L describe the impact progression. A rectangular progression of the peak torque is the heaviest impact ($S_A/S_L = 2.0$). A flat sinus progression of the peak torque is a light impact ($S_A/S_L = 1.2$).

5.3. T_S, the peak torque in the coupling, is the maximum torque on the coupling during the impact minus the system torque having an effect on the coupling during normal operation.

$T_S = T_{max,\,impact} - T_N$

5.4. If a drive is operated supercritically, meaning that the operating speed n lies above the resonance speed n_R, then resonance passing through causes particular loads.
If the resonance passes through quickly below the operating speed, only a few resonance peaks occur. The alternating torque in resonance can therefore be compared to the maximum torque on the coupling (see also 5.6).

5.5. S_f takes the frequency dependency of lifetime into account. The frequency dependency is first taken into account above 5 Hz.

5.6. On appreciable vibration excitation, the resonance must be moved out of the operating range by selecting a suitable torsional spring rigidity of the coupling.

ROBA®-ES Coupling Dimensioning

Service Factors for Coupling Dimensioning

V_R = Resonance factor

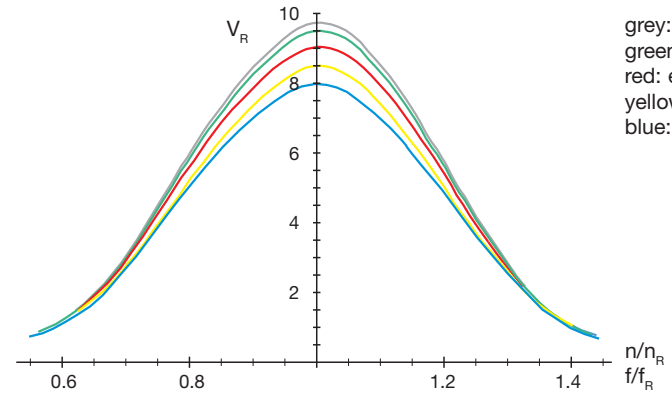

grey: Elastomeric element 72 Sh D
green: elastomeric element 64 Sh D
red: elastomeric element 98 Sh A
yellow: elastomeric element 92 Sh A
blue: elastomeric element 80 Sh A

n_R = Resonance speed

$$n_R = \frac{30}{\pi} \sqrt{C_{T\,dyn.} \frac{J_A + J_L}{J_A \times J_L}} \quad [rpm]$$

f_R = Resonance frequency

$$f_R = \frac{1}{2\pi} \sqrt{C_{T\,dyn.} \frac{J_A + J_L}{J_A \times J_L}} \quad [s^{-1}]$$

S_n = Speed factor

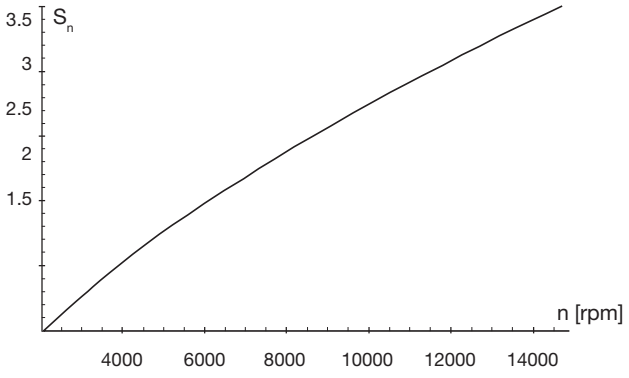

S_Z = Start-up factor/impact frequency

S/h	0 – 100	101 – 200	201 – 400	401 – 800	801 – 1600
S_Z	1	1.2	1.4	1.6	1.8

S_δ = Safety factor for temperature

T [°C]	-30 °C / +30 °C	+60 °C	+90 °C
S_δ	1	1.5	2

S_L or S_A = Impact factor

Impacts	S_A or S_L
Light impacts	1.2
Medium impacts	1.6
Heavy impacts	2.0

S_f = Frequency factor

f in H_z	≤ 5	> 5
S_f	1	$\sqrt{\frac{f}{5}}$

f shows the load alternation per second (Hz = s^{-1})

Terms

$P_{AN/LN}$	[kW]	Drive-side/load-side power
T_R	[Nm]	Transmittable torque (frictional locking, Tables pages 27 to 29)
$T_{AS/AW}$	[Nm]	Excitational torque drive end
$T_{LS/LW}$	[Nm]	Excitational torque load side
T_N	[Nm]	System torque
T_W	[Nm]	System alternating torque
T_S	[Nm]	Peak torque
T_{max}	[Nm]	Maximum torque in the coupling
T_{KN}	[Nm]	Permitted nominal torque
T_{Kmax}	[Nm]	Permitted maximum torque
T_{KW}	[Nm]	Permitted permanent alternating torque
J_A	[kgm²]	Mass moment of inertia, drive end
J_L	[kgm²]	Mass moment of inertia, load side
ΔK_a	[mm]	Permitted axial displacement
ΔK_r	[mm]	Permitted radial misalignment
ΔK_w	[°]	Permitted angular misalignment
ΔW_a	[mm]	Axial shaft misalignment
ΔW_r	[mm]	Radial shaft misalignment
ΔW_w	[°]	Angular shaft misalignment
c_T	[Nm/rad]	Torsional spring rigidity
n	[rpm]	Nominal speed
n_R	[rpm]	Resonance speed
$S_{A/L}$	[-]	Impact factor drive end /load side
S_n	[-]	Speed factor
S_Z	[-]	Start-up factor/impact frequency
S_δ	[-]	Temperature factor
S_f	[-]	Frequence factor
V_R	[-]	Resonance factor
f	[1/s]=[Hz]	Load factor
f_R	[Hz]	Resonance frequency

Technical Explanations

ROBA®-ES Elastomeric Elements

Elastomeric element hardness [Shore]	Colour	Permitted temperature range	
		Permanent temperature	Temporary max. temperature
80 Sh A	blue	-50 to +80 °C	-60 to +120 °C
92 Sh A	yellow	-40 to +90 °C	-50 to +120 °C
98 Sh A	red	-30 to +90 °C	-40 to +120 °C
64 Sh D	green	-30 to +100 °C	-40 to +140 °C
72 Sh D	grey	-20 to +110 °C	-20 to +150 °C

Torques

Size	Torques									
	Elastomeric element hardness									
	80 Sh A (blue)		92 Sh A (yellow)		98 Sh A (red)		64 Sh D (green)		72 Sh D (grey)	
	T_{KN} [Nm]	$T_{K\,max}$ [Nm]	T_{KN} [Nm]	$T_{K\,max}$ [Nm]	T_{KN} [Nm]	$T_{K\,max}$ [Nm]	T_{KN} [Nm]	$T_{K\,max}$ [Nm]	T_{KN} [Nm]	$T_{K\,max}$ [Nm]
14	4	8	8	16	13	26	16	32	-	-
19	5	10	10	20	17	34	21	42	27	54
24	17	34	35	70	60	120	75	150	95	190
28	46	92	95	190	160	320	200	400	260	520
38	95	190	190	380	325	650	405	810	525	1050
42	125	250	265	530	450	900	560	1120	725	1450
48	150	300	310	620	525	1050	655	1310	850	1700
55	200	400	410	820	685	1370	825	1650	-	-
65	450	900	900	1800	1040	2080	1250	2500	-	-

Please Observe: To determine the coupling torque, observe the "ROBA®-ES Coupling Dimensioning" starting on page 22!

Spring Rigidity [1)]

Size	Torsional spring rigidity											Radial spring rigidity				
	static $C_{T\,stat.}$					dynamic $C_{T\,dyn}$					relative $C_{T\,H\,rel.}$	static C_r				
	80 Sh A	92 Sh A	98 Sh A	64 Sh D	72 Sh D	80 Sh A	92 Sh A	98 Sh A	64 Sh D	72 Sh D	Sleeve	80 Sh A	92 Sh A	98 Sh A	64 Sh D	72 Sh D
	[Nm/rad.]										[10^6 Nm mm/ rad.]	[N/mm]				
14	50	80	120	230	-	120	240	300	730	-	0.65	180	300	470	960	-
19	350	820	900	1400	2100	1050	1800	2200	4200	3200	2.18	700	1200	2100	2700	4100
24	820	2300	3700	4500	7200	1300	4800	7600	10800	10500	6.26	800	1900	2800	4200	7100
28	1300	3800	4200	7000	12500	2200	6800	10100	17200	23000	11.15	950	2100	3500	4900	9200
38	2000	5600	7400	9000	25000	3400	11900	19900	30500	45000	18.11	1300	2900	4800	5600	12000
42	3500	9800	13800	15000	45000	5950	20500	31100	64900	80000	109.66	3400	4100	5400	6900	16000
48	4300	12000	15100	28500	62000	7300	22800	44900	102800	110000	254.50	3750	4500	6200	8200	18000
55	5100	14200	20500	56300	-	8300	25800	48200	117400	-	421.75	4730	5680	8200	22500	-
65	6800	19100	32800	90200	-	11500	36200	67400	164000	-	555.18	6360	7640	13120	36000	-
Only for type 940._11.P																
14-32	50	80	120	230	-	120	240	300	730	-	-	180	300	470	960	-
19-37.5	280	660	720	1120	-	840	1440	1760	3360	-	-	560	960	1680	2160	-
24-50	600	1700	2700	3300	-	1000	3600	5700	8100	-	-	600	1500	2100	3200	-

1) The C_T-value of a double-jointed coupling can be roughly calculated as follows:

$$C_{T\,ges.} = \frac{1}{\frac{2}{C_T} + \frac{H_S\,[mm] - 2\,E\,[mm]}{C_{T\,H\,rel.}}}$$

Technical Explanations

Permitted Misalignment Values

Size	Shaft misalignments Basic Type										
	Axial	Radial					Angular				
	ΔK_a 80/92/98 Sh A 64/72 Sh D	ΔK_r 80 Sh A	ΔK_r 92 Sh A	ΔK_r 98 Sh A	ΔK_r 64 Sh D	ΔK_r 72 Sh D	ΔK_w 80 Sh A	ΔK_w 92 Sh A	ΔK_w 98 Sh A	ΔK_w 64 Sh D	ΔK_r 72 Sh D
	[mm]	[mm]	[mm]	[mm]	[mm]	[mm]	[°]	[°]	[°]	[°]	[°]
Misalignment values Basic Type											
14	1.0	0.21	0.15	0.09	0.06	-	1.1	1.0	0.9	0.8	-
19	1.2	0.15	0.1	0.06	0.04	0.03	1.1	1.0	0.9	0.8	0.7
24	1.4	0.18	0.14	0.1	0.07	0.04	1.1	1.0	0.9	0.8	0.7
28	1.5	0.2	0.15	0.11	0.08	0.05	1.3	1.0	0.9	0.8	0.7
38	1.8	0.22	0.17	0.12	0.09	0.06	1.3	1.0	0.9	0.8	0.7
42	2.0	0.24	0.19	0.14	0.1	0.07	1.3	1.0	0.9	0.8	0.7
48	2.1	0.26	0.21	0.16	0.11	0.08	1.3	1.0	0.9	0.8	0.7
55	2.2	0.28	0.24	0.17	0.12	-	1.3	1.0	0.9	0.8	-
65	2.6	0.3	0.25	0.18	0.13	-	1.3	1.0	0.9	0.8	-
Only available on P-design											
14-32	1.0	0.21	0.15	0.09	0.06	-	1.1	1.0	0.9	0.8	-
19-37.5	1.2	0.15	0.1	0.06	0.04	-	1.1	1.0	0.9	0.8	-
24-50	1.4	0.18	0.14	0.1	0.07	-	1.1	1.0	0.9	0.8	-
Misalignment values with connection piece											
							per side				
14	2.0	0.42	0.30	0.18	0.12	-	1.1	1.0	0.9	0.8	-
19	2.4	0.3	0.20	0.12	0.08	0,06	1.1	1.0	0.9	0.8	0.7
24	2.8	0.36	0.28	0.20	0.14	0,08	1.1	1.0	0.9	0.8	0.7
28	3.0	0.4	0.30	0.22	0.16	0,10	1.3	1.0	0.9	0.8	0.7
38	3.6	0.44	0.34	0.24	0.18	0,12	1.3	1.0	0.9	0.8	0.7
42	4.0	0.48	0.38	0.28	0.20	0,14	1.3	1.0	0.9	0.8	0.7
48	4.2	0.52	0.42	0.32	0.22	0,16	1.3	1.0	0.9	0.8	0.7
55	4.4	0.56	0.48	0.34	0.24	-	1.3	1.0	0.9	0.8	-
65	5.2	0.6	0.50	0.36	0.26	-	1.3	1.0	0.9	0.8	-
Misalignment values with sleeve											
		$(L_3 - 2 \times l_1 - E) \times A$ (Calculation factor)					per side				
14	2.0	A = 0.0097	A = 0.0087	A = 0.0079	A = 0.0070	A = 0.0061	1.1	1.0	0.9	0.8	-
19	2.4						1.1	1.0	0.9	0.8	0.7
24	2.8						1.1	1.0	0.9	0.8	0.7
28	3.0	A = 0.0113					1.3	1.0	0.9	0.8	0.7
38	3.6						1.3	1.0	0.9	0.8	0.7
42	4.0						1.3	1.0	0.9	0.8	0.7
48	4.2						1.3	1.0	0.9	0.8	0.7
55	4.4						1.3	1.0	0.9	0.8	-
65	5.2						1.3	1.0	0.9	0.8	-

Technical Explanations

Permitted Speeds (critical bending speed) for Sleeve

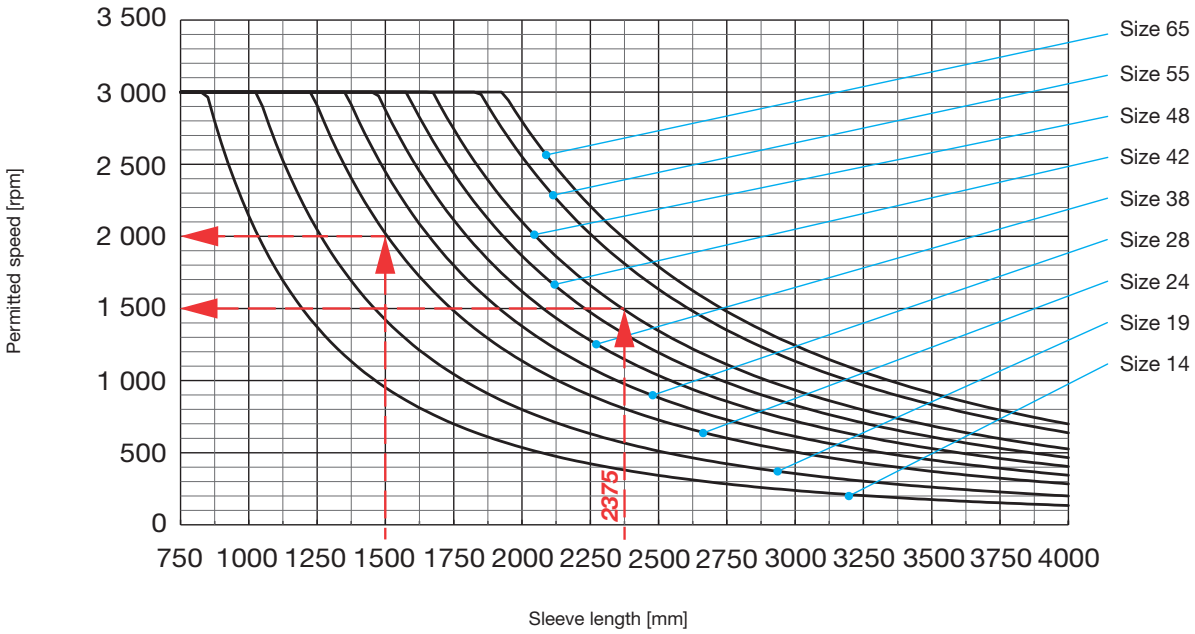

Examples

- ROBA®-ES, Size 48:

Sleeve length: **H_s = 2375 mm**
= > permitted speed: **1500 rpm**

- ROBA®-ES, Size 24:

Sleeve length: **H_s = 1500 mm**
= > permitted speed: **2000 rpm**

Using the coupling at high speeds

- Please keep to the maximum speeds defined in the catalogue. Higher speeds are only permitted after contacting the manufacturers.
- Please operate designs with sleeve at subcritical levels.
- Both hub variants clamping hub and split clamping hub may only be used within a limited speed range. At very high speeds, shrink disk hubs and key hubs (press fit) should be used.
- We recommend balancing the coupling in individual parts or complete.
- Shaft misalignments should be kept as low as possible to increase the smooth running of a system.
- When using double cardanic shafts, axial animation of the middle coupling part is possible due to operating speed and misalignment. In order to avoid this animation, please minimise the shaft misalignment.

Technical Explanations

Transmittable Torques

Shrink disk hubs made of aluminium Type 940._11.A			Bore	Size 14	19	24	28	38
Frictionally-locking transmittable torques **Shrink disk hubs made of aluminium**	T_R	[Nm]	Ø6	13.5		-	-	-
			Ø7	16.5		-	-	-
			Ø8	19.0		-	-	-
			Ø9	22.5		-	-	-
			Ø10	19.0	41	-	-	-
			Ø11	22.5	48	-	-	-
			Ø12	26.5	58			
			Ø14	34.5	77	-	-	-
			Ø15	-	87	67	-	-
			Ø16	-	88	78	-	-
			Ø17	-	107	89	-	-
			Ø18	-	117	100	-	-
			Ø19	-	126	109	194	-
Suitable for H7 / k6			Ø20	-	136	121	214	247
			Ø22	-	-	143	255	299
			Ø24	-	-	166	296	352
With larger fit clearance, the transmittable torque is reduced.			Ø25	-	-	178	317	379
			Ø28	-	-	212	381	463
			Ø30	-	-	-	423	519
			Ø32	-	-	-	462	567
			Ø35	-	-	-	528	653
			Ø38	-	-	-	594	739
			Ø40	-	-	-	-	797
			Ø42	-	-	-	-	855
			Ø45	-	-	-	-	942

Shrink disk hubs made of steel Type 940._11.P			Bore	Size 14-32	19-37.5	19	24-50	24	28	38
Frictionally-locking transmittable torques **Shrink disk hubs made of steel**	T_R	[Nm]	Ø6	4.0			-	-	-	-
			Ø7	8.0			-	-	-	-
			Ø8	11.5			-	-	-	-
			Ø9	15.0			-	-	-	-
			Ø10	19.5	17	7	-	-	-	-
			Ø11	23.5	25	13	-	-	-	-
			Ø12	10.5	35	22				
			Ø14	21.5	59	44	-	-	-	-
			Ø15	-	72	56	18	-	-	-
			Ø16	-	85	68	29	20	-	-
			Ø17	-	-	81	42	31	-	-
			Ø18	-	-	94	54	43	-	-
			Ø19	-	-	106	66	54	71	-
Suitable for H6 / k6			Ø20	-	-	120	79	67	91	-
			Ø22	-	-	-	109	95	134	111
			Ø24	-	-	-	139	124	179	165
With larger fit clearance, the transmittable torque is reduced.			Ø25	-	-	-	-	139	203	193
			Ø28	-	-	-	-	186	277	282
			Ø30	-	-	-	-	-	329	346
			Ø32	-	-	-	-	-	375	395
			Ø35	-	-	-	-	-	460	500
			Ø38	-	-	-	-	-	548	608
			Ø40	-	-	-	-	-	-	685
			Ø42	-	-	-	-	-	-	761
			Ø45	-	-	-	-	-	-	879

Shrink disk hubs made of steel Type 940._11.F			Bore	Size 42	48	55	65
Frictionally-locking transmittable torques **Shrink disk hubs made of steel**	T_R	[Nm]	Ø28	215	-	-	-
			Ø30	285	-	-	-
			Ø32	330	-	-	-
			Ø35	450	475	-	-
			Ø38	570	620	-	-
			Ø40	655	720	555	-
			Ø42	745	820	655	-
			Ø45	875	980	825	1195
			Ø48	1010	1150	1000	1425
			Ø50	1105	1265	1120	1595
Suitable for H7 / k6			Ø52	-	1350	1245	1680
			Ø55	-	1530	1430	1945
			Ø58	-	1720	1625	2210
With larger fit clearance, the transmittable torque is reduced.			Ø60	-	1840	1755	2395
			Ø62	-	-	1890	2575
			Ø65	-	-	2090	2855
			Ø68	-	-	2295	3140
			Ø70	-	-	2435	3330
			Ø72	-	-	-	3525
			Ø75	-	-	-	3825

Technical Explanations

Transmittable Torques

Clamping hubs Type 94_._00._			Bore	Size 14	19	24	28	38	42	48	55	65
Frictionally-locking transmittable torques **Clamping hubs** Suitable for F7 / k6 With larger fit clearance, the transmittable torque is reduced.	T_R	[Nm]	Ø6	2.5	-	-	-	-	-	-	-	-
			Ø7	3.0	-	-	-	-	-	-	-	-
			Ø8	3.4	-	-	-	-	-	-	-	-
			Ø9	3.8	-	-	-	-	-	-	-	-
			Ø10	4.2	23	-	-	-	-	-	-	-
			Ø11	4.7	25	-	-	-	-	-	-	-
			Ø12	5.1	27	-	-	-	-	-	-	-
			Ø14	6.0	32	-	-	-	-	-	-	-
			Ø15	6.4	34	34	-	-	-	-	-	-
			Ø16	-	36	36	-	-	-	-	-	-
			Ø18	-	41	41	-	-	-	-	-	-
			Ø19	-	43	43	79	-	-	-	-	-
			Ø20	-	45	45	83	83	-	-	-	-
			Ø22	-	-	50	91	91	-	-	-	-
			Ø24	-	-	54	100	100	-	-	-	-
			Ø25	-	-	57	104	104	-	-	-	-
			Ø28	-	-	63	116	116	208	-	-	-
			Ø30	-	-	-	124	124	228	-	-	-
			Ø32	-	-	-	133	133	248	-	-	-
			Ø35	-	-	-	145	145	280	350	-	-
			Ø38	-	-	-	-	158	315	390	-	-
			Ø40	-	-	-	-	166	340	420	340	-
			Ø42	-	-	-	-	174	365	455	365	-
			Ø45	-	-	-	-	187	404	505	405	545
			Ø48	-	-	-	-	-	442	560	435	590
			Ø50	-	-	-	-	-	470	600	465	630
			Ø52	-	-	-	-	-	-	640	490	662
			Ø55	-	-	-	-	-	-	705	525	710
			Ø58	-	-	-	-	-	-	-	570	764
			Ø60	-	-	-	-	-	-	-	600	800
			Ø62	-	-	-	-	-	-	-	625	840
			Ø65	-	-	-	-	-	-	-	665	900
			Ø68	-	-	-	-	-	-	-	700	954
			Ø70	-	-	-	-	-	-	-	740	990
			Ø72	-	-	-	-	-	-	-	-	1032
			Ø75	-	-	-	-	-	-	-	-	1095
			Ø78	-	-	-	-	-	-	-	-	1158
			Ø80	-	-	-	-	-	-	-	-	1200

Clamping hubs Compact Type 94_._55._			Bore	Size 14	19	24	28	38
Frictionally-locking transmittable torques **Clamping hubs Compact** Suitable for F7 / k6 With larger fit clearance, the transmittable torque is reduced.	T_R	[Nm]	Ø5	5				
			Ø6	6				
			Ø7	7				
			Ø8	8	18			
			Ø9	9	20			
			Ø10	10	23	23		
			Ø11	11	25	25		
			Ø12	12	27	27		
			Ø13		29	29		
			Ø14		32	32	58	
			Ø15		34	34	62	98
			Ø16		36	36	66	105
			Ø17		38	38	71	110
			Ø18		41	41	75	118
			Ø19		43	43	79	124
			Ø20		45	45	83	131
			Ø21			48	87	137
			Ø22			50	91	144
			Ø23			52	95	150
			Ø24			54	100	157
			Ø25			57	104	163
			Ø26			59	108	170
			Ø27			61	112	176
			Ø28			63	116	183
			Ø29			66	120	190
			Ø30			68	124	196
			Ø31			70	129	203
			Ø32			72	133	209
			Ø33				137	216
			Ø34				141	222
			Ø35				145	229
			Ø36					235
			Ø37					242
			Ø38					248
			Ø39					255
			Ø40					261
			Ø41					268
			Ø42					274
			Ø43					281
			Ø44					288
			Ø45					294

Technical explanations

Transmittable Torques

Split clamping hubs Type 94_._33._			Bore	Size 14	19	24	28	38	42	48	55	65
Frictionally-locking transmittable torques **Split clamping hubs** Suitable for H7 / g6 With larger fit clearance, the transmittable torque is reduced.	T_R	[Nm]	Ø8	4	18							
			Ø9	4.5	20							
			Ø10	5	23	23						
			Ø11	5.5	25	25						
			Ø12	6	27	27						
			Ø13	6.5	29	29						
			Ø14	7	32	32	58					
			Ø15	7.5	34	34	62					
			Ø16		36	36	66					
			Ø17		38	38	71					
			Ø18		41	41	75	75				
			Ø19		43	43	79	79				
			Ø20		45	45	83	83				
			Ø21			48	87	87				
			Ø22			50	91	91	144	210		
			Ø23			52	95	95	150	220		
			Ø24			54	100	100	157	229		
			Ø25			57	104	104	163	239		
			Ø26			59	108	108	170	248		
			Ø27			61	112	112	176	258		
			Ø28			63	116	116	183	267		
			Ø29				120	120	190	277		
			Ø30				124	124	196	287		
			Ø31				129	129	203	296		
			Ø32				133	133	209	306		
			Ø33				137	137	216	315		
			Ø34				141	141	222	325		
			Ø35				145	145	229	334		
			Ø36					149	235	344		
			Ø37					153	242	353		
			Ø38					158	248	363		
			Ø39					162	255	372		
			Ø40					166	261	382	382	
			Ø41					170	268	392	392	
			Ø42					174	274	401	401	
			Ø43					178	281	411	411	
			Ø44					182	288	420	420	
			Ø45					187	294	430	430	430
			Ø46						301	439	439	439
			Ø47						307	449	449	449
			Ø48						314	458	458	458
			Ø49						320	468	468	468
			Ø50						327	478	478	478
			Ø51							487	487	487
			Ø52							497	497	497
			Ø53							506	506	506
			Ø54							516	516	516
			Ø55							525	525	525
			Ø56								535	535
			Ø57								544	544
			Ø58								554	554
			Ø59								563	563
			Ø60								573	573
			Ø61								583	583
			Ø62								592	592
			Ø63								602	602
			Ø64								611	611
			Ø65								621	621
			Ø66								630	630
			Ø67								640	640
			Ø68								649	649
			Ø69								659	659
			Ø70								669	669
			Ø71									678
			Ø72									688
			Ø73									697
			Ø74									707
			Ø75									716
			Ø76									726
			Ø77									735
			Ø78									745
			Ø79									755
			Ø80									764

Expansion hubs Type 94_._4_._			Bore	Size 14	19	24	28
Frictionally-locking transmittable torques Suitable for H7 / h7 **Expansion hubs made of steel**	T_R	[Nm]	Ø12	15.7			
			Ø20		36.6		
			Ø25			84.4	
			Ø35				188

Technical Explanations

ROBA®-ES stands for flexible (E), backlash-free (S) shaft coupling. The device consists of two coupling hubs and a flexible, star-shaped intermediate ring (Fig. 1).

ROBA®-ES couplings are conceived specially for backlash-free operation at comparatively high speeds.

ROBA®-ES couplings are mainly used in measurement technology and control engineering as well as in control and procedure technology.

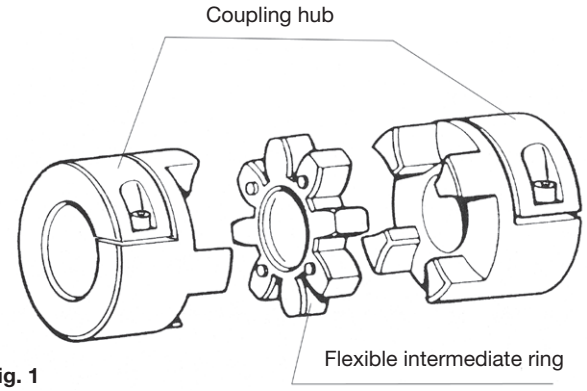

Fig. 1

Shaft Misalignments

The ROBA®-ES coupling compensate for radial, axial and angular shaft misalignments (Fig. 3) without losing their backlash-free function. However, the permitted misalignments indicated on page 25 must not simultaneously reach their maximum value. If more than one kind of misalignment takes place simultaneously, they influence each other. This means that the permitted misalignment values are dependent on one another, see Fig. 2. The sum total of the actual misalignments – in percent of the maximum value – must not exceed 100 %.
The permitted misalignment values given on page 25 refer to coupling operation at nominal torque, an ambient temperature of +30 °C and an operating speed of 1500 rpm.

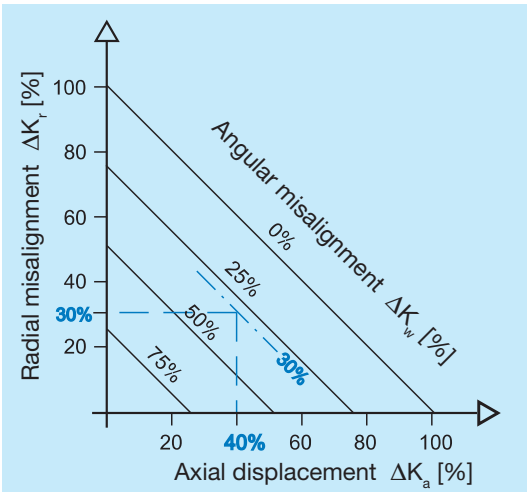

Fig. 2

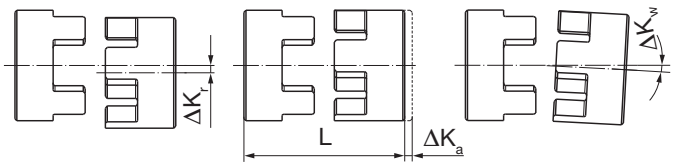

Radial misalignment | Axial displacement | Angular misalignment

Fig. 3

Technical Explanations

State of Delivery

ROBA®-ES couplings are delivered manufacturer-assembled ready for installation.
The star-shaped intermediate ring is pressed into the specially designed claws (Fig. 4) under light pre-tension.

The principle of backlash-free torque transmission is possible due to this pre-tension.

ROBA®-ES couplings are delivered in four torque variations; that is with four different flexible intermediate rings varying in shore hardness and colour (see Type key page 24).

Due to the small structural dimensions and therefore the low mass moments of inertia, the device allows itself to be installed even into small installation spaces.

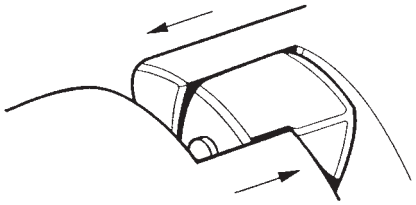

Fig. 4

Balancing

Key hubs and clamping hubs:
Key hubs and clamping hubs rotate at maximum speed with a circumferential speed of 30 m/s. They are not balanced for standard delivery.

Shrink disk hubs:
Shrink disk hubs maintain balance quality G = 6.3 up to speed n_G (equals approx. 30 m/s) without needing to be balanced. Above this speed, we recommend balancing. The hubs are balanced individually. Diagram 1 shows reference values. We recommend you use these values to balance the coupling components.

Smooth running of a machine or system is not only dependent on the balance quality of the coupling, but also on many parameters such as rigidity or distance to the adjacent bearing. Therefore there are no fixed rules in which conditions you have to balance.

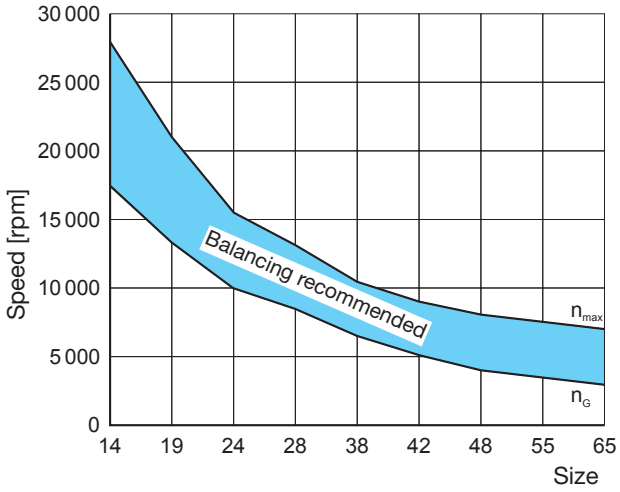

Diagram 1: Balancing the Shrink Disk Hubs

Headquarters

Chr. Mayr GmbH + Co. KG
Eichenstraße 1, D-87665 Mauerstetten
Tel.: +49 83 41/8 04-0, Fax: +49 83 41/80 44 21
www.mayr.com, E-Mail: public.mayr@mayr.com

mayr®
your reliable partner

Service Germany/Austria

Baden-Württemberg
Esslinger Straße 7
70771 Leinfelden-Echterdingen
Tel.: 07 11/78 26 26 40
Fax: 07 11/78 26 26 39

Bavaria
Industriestraße 51
82194 Gröbenzell
Tel.: 0 81 42/50 19 808

Chemnitz
Bornaer Straße 205
09114 Chemnitz
Tel.: 03 71/4 74 18 96
Fax: 03 71/4 74 18 95

Franken
Unterer Markt 9
91217 Hersbruck
Tel.: 0 91 51/81 48 64
Fax: 0 91 51/81 62 45

Kamen
Herbert-Wehner-Straße 2
59174 Kamen
Tel.: 0 23 07/24 26 79
Fax: 0 23 07/24 26 74

North
Schiefer Brink 8
32699 Extertal
Tel.: 0 57 54/9 20 77
Fax: 0 57 54/9 20 78

Rhine-Main
Kohlhäuser Str. 3-5
36043 Fulda
Tel.: 06 61/96 21 02 15

Austria
Pummerinplatz 1, TIZ I, A27
4490 St. Florian, Austria
Tel.: 0 72 24/2 20 81-12
Fax: 0 72 24/2 20 81 89

Branch office

China
Mayr Zhangjiagang
Power Transmission Co., Ltd.
Fuxin Road No.1298, Yangshe Town
215637 Zhangjiagang
Tel.: 05 12/58 91-75 67
Fax: 05 12/58 91-75 66
info@mayr-ptc.cn

France
Mayr France S.A.S.
Z.A.L. du Minopole
Rue Nungesser et Coli
62160 Bully-Les-Mines
Tel.: 03.21.72.91.91
Fax: 03.21.29.71.77
contact@mayr.fr

Great Britain
Mayr Transmissions Ltd.
Valley Road, Business Park
Keighley, BD21 4LZ
West Yorkshire
Tel.: 0 15 35/66 39 00
Fax: 0 15 35/66 32 61
sales@mayr.co.uk

Italy
Mayr Italia S.r.l.
Viale Veneto, 3
35020 Saonara (PD)
Tel.: 049/879 10 20
Fax: 049/879 10 22
info@mayr-italia.it

Japan
Mayr Japan LLC
2F, 1-1-9 Nihonbashi Kakigara-cho,
Chuo-ku Tokyo, 103-0014 Japan
Tel.: 03/35 27-29 00
Fax: 03/35 27-26 61
public.mayr@mayr.co.jp

Singapore
Mayr Transmission (S) PTE Ltd.
No. 8 Boon Lay Way Unit 03-06,
TradeHub 21
Singapore 609964
Tel.: 00 65/65 60 12 30
Fax: 00 65/65 60 10 00
info@mayr.com.sg

Switzerland
Mayr Kupplungen AG
Tobeläckerstraße 11
8212 Neuhausen am Rheinfall
Tel.: 0 52/6 74 08 70
Fax: 0 52/6 74 08 75
info@mayr.ch

USA
Mayr Corporation
10 Industrial Avenue
Mahwah
NJ 07430
Tel.: 2 01/4 45-72 10
Fax: 2 01/4 45-80 19
info@mayrcorp.com

Representatives

Australia
Drive Systems Pty Ltd.
8/32 Melverton Drive
Hallam, Victoria 3803
Australien
Tel.: 0 3/97 96 48 00
info@drivesystems.com.au

India
National Engineering
Company (NENCO)
J-225, M.I.D.C.
Bhosari Pune 411026
Tel.: 0 20/27 13 00 29
Fax: 0 20/27 13 02 29
nenco@nenco.org

Netherlands
Groneman BV
Amarilstraat 11
7554 TV Hengelo OV
Tel.: 074/2 55 11 40
Fax: 074/2 55 11 09
aandrijftechniek@groneman.nl

Poland
Wamex Sp. z o.o.
ul. Pozaryskiego, 28
04-703 Warszawa
Tel.: 0 22/6 15 90 80
Fax: 0 22/8 15 61 80
wamex@wamex.com.pl

South Korea
Mayr Korea Co. Ltd.
15, Yeondeok-ro 9beon-gil
Seongsan-gu
51571 Changwon-si
Gyeongsangnam-do. Korea
Tel.: 0 55/2 62-40 24
Fax: 0 55/2 62-40 25
info@mayrkorea.com

Taiwan
German Tech
Component Co., Ltd.
No.10-3, Ln. 358, Sec. 1,
Hemu Rd., Shengang Dist.,
429012 Taichung City
Tel.: +886 (4) 25150566
Fax: +886 (4) 25152413
abby@zfgta.com.tw

Czech Republic
BMC - TECH s.r.o.
Hviezdoslavova 29 b
62700 Brno
Tel.: 05/45 22 60 47
Fax: 05/45 22 60 48
info@bmc-tech.cz

Turkey
Representative Office Turkey
Kucukbakkalkoy Mah.
Brandium Residence R2
Blok D:254
34750 Atasehir - Istanbul, Turkey
Tel.: 02 16/2 32 20 44
Fax: 02 16/5 04 41 72
info@mayr.com.tr

More representatives:

Belgium, Brazil, Canada, Colombia, Croatia, Denmark, Finland, Greece, Hongkong, Hungary, Indonesia, Israel, Luxembourg, Malaysia, Mexico,New Zealand, Norway, Philippines, Portugal, Romania, Russia, Slovakia, Slovenia, South Africa, Spain, Sweden, Thailand

You can find the complete contact details for the representative responsible for your area in the Contact section at www.mayr.com

28/04/2022 GC/NN